B. P. R. REG. NO.	STATE	PROJECT NUMBER	SHEET NO.	TOTAL SHEETS
1	MAINE	I-95-8(61)	1	26

STATE OF MAINE

STATE HIGHWAY COMMISSION

INTERSTATE 95 BRIDGES

AT

LINCOLN SPUR

AND

CANADIAN PACIFIC RAILWAY

IN

T2 R8

PENOBSCOT COUNTY

FEDERAL AID PROJECT NO. I-95-8(61)222

LENGTH OF PROJECT 0.089 MILES

TRAFFIC DATA

LINCOLN SPUR OVER I-95	
1966 ADT	280
1986 ADT	445
DHV	53
T	14 %
D	60%

I-95 UNDER LINCOLN SPUR	
1966 ADT	1590
1986 ADT	2480
DHV	300
T	14%
D	60 %
V	60 MPH

I-95 OVER C. P. R.	
1966 ADT	1850
1986 ADT	2890
DHV	345
T	14 %
D	60%
V	60 MPH

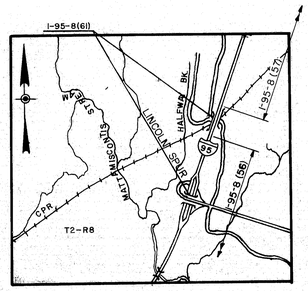

LOCATION MAP

APPROX. SCALE— 1" = 1 MILE

APPROVED
CANADIAN PACIFIC RAILWAY

CHIEF ENGINEER — March 3, 1965 DATE

APPROVED
MAINE STATE HIGHWAY COMMISSION

CHAIRMAN

CHIEF ENGINEER — Jan. 6, 1965 DATE

DEPARTMENT OF COMMERCE
BUREAU OF PUBLIC ROADS
REGION 1

APPROVED

DIVISION ENGINEER — DATE

Sheet 1 of 14

95-149

0 1 2 3 4 5 INCHES

B. P. R. REG. NO.	STATE	PROJECT NUMBER	SHEET NO.	TOTAL SHEETS
1	MAINE	I-95-8(61)	2	26

ESTIMATE OF QUANTITIES

DESCRIPTION	UNIT	QUANTITY
STRUCTURAL EARTH EXCAVATION-PIERS	CUBIC YARDS	50
GRANULAR BORROW	CUBIC YARDS	22,500
GRAVEL BASE COURSE - IN PLACE MEASUREMENT	CUBIC YARDS	850
BITUMINOUS TREATED STONE SLOPE PROTECTION	SQ YDS	1000
BITUMINOUS CONCRETE SURFACE COURSE (HAND PLACED) TYPE "B"	TONS	18
PORTLAND CEMENT CONCRETE, ABUTMENTS and RETAINING WALLS	CUBIC YARDS	285
PORTLAND CEMENT CONCRETE, PIERS	CUBIC YARDS	217
PORTLAND CEMENT CONCRETE ROADWAY and SIDEWALK SLABS ON STEEL BRIDGES	CUBIC YARDS	210
* STRUCTURAL STEEL, FABRICATED and DELIVERED (CANADIAN PACIFIC RAILWAY)	LUMP SUM	LUMP SUM
* STRUCTURAL STEEL, ERECTION (CANADIAN PACIFIC RAILWAY)	LUMP SUM	LUMP SUM
* STRUCTURAL STEEL, FIELD PAINTING (CANADIAN PACIFIC RAILWAY)	LUMP SUM	LUMP SUM
REINFORCING STEEL, DELIVERED	POUNDS	98,100
REINFORCING STEEL, PLACING	POUNDS	98,100
STEEL H-BEAM PILES 42 lbs/ft	LIN FT	2,436
BRIDGE RAIL	LIN FT	355
▶ MEMBRANE WATERPROOFING	SQ YDS	850
EXPOXY RESIN SURFACE SEALANT	SQ YDS	180
VERTICAL BRIDGE CURB - TYPE I	LIN FT	388
SAND FILLED EMULSIFIED ASPHALT SEALING COMPOUND (BLACK)	SQ. YDS.	108
▶ BITUMINOUS CONCRETE SURFACE COURSE - TYPE "A"	TONS	95
FIELD OFFICE - TYPE "C" (CANADIAN PACIFIC RAILWAY)	LUMP SUM	LUMP SUM

* ESTIMATED WEIGHT OF STRUCTURAL STEEL - 198,000 LBS, INCLUDING DRAINS, IS BASED ON NOMINAL SIZES & DOES NOT INCLUDE WELDS.

▶ NOT A PART OF THIS CONTRACT.

INDEX OF SHEETS

SHEET NO	DESCRIPTION
1	TITLE SHEET
2	INDEX & QUANTITIES
3	GENERAL PLAN
4	SURVEY
5	FOUNDATION SURVEY
6 7	CROSS SECTIONS
8	ABUTMENT 1
9	ABUTMENT 2
10	PIERS
11	STRUCTURAL STEEL
12	SUPERSTRUCTURE
13	SLOPE PROTECTION & SUPERSTRUCTURE DETAILS
14	REINFORCING STEEL & APPROACH SLABS
STANDARD DETAILS	
BD 101-64	BEARING PEDESTALS
BD 103-64	BEAM SPLICES
BD 104-64	DIAPHRAGMS; ARMORED JOINTS; SHEAR CONNECTORS; DRAIN
BD 107-64	STEEL RAIL
BD 108-64	ALUMINUM RAIL
ENGINEERS FIELD OFFICES	

DESIGN- G.O.T.	BRIDGE NO.
TRACE-	SURVEY-
CHECK- R.L.A.	PLOT-

STATE HIGHWAY COMMISSION
BRIDGE DIVISION

INTERSTATE 95
OVER
CANADIAN PACIFIC RAILWAY
IN
T2R8
PENOBSCOT COUNTY

INDEX & QUANTITIES

SHEET 2 OF 14 AUGUSTA, MAINE JAN. 1965

95-150

B. P. R. REG. NO.	STATE	PROJECT NUMBER	SHEET NO.	TOTAL SHEETS
1	MAINE	I-95-8(61)	3	26

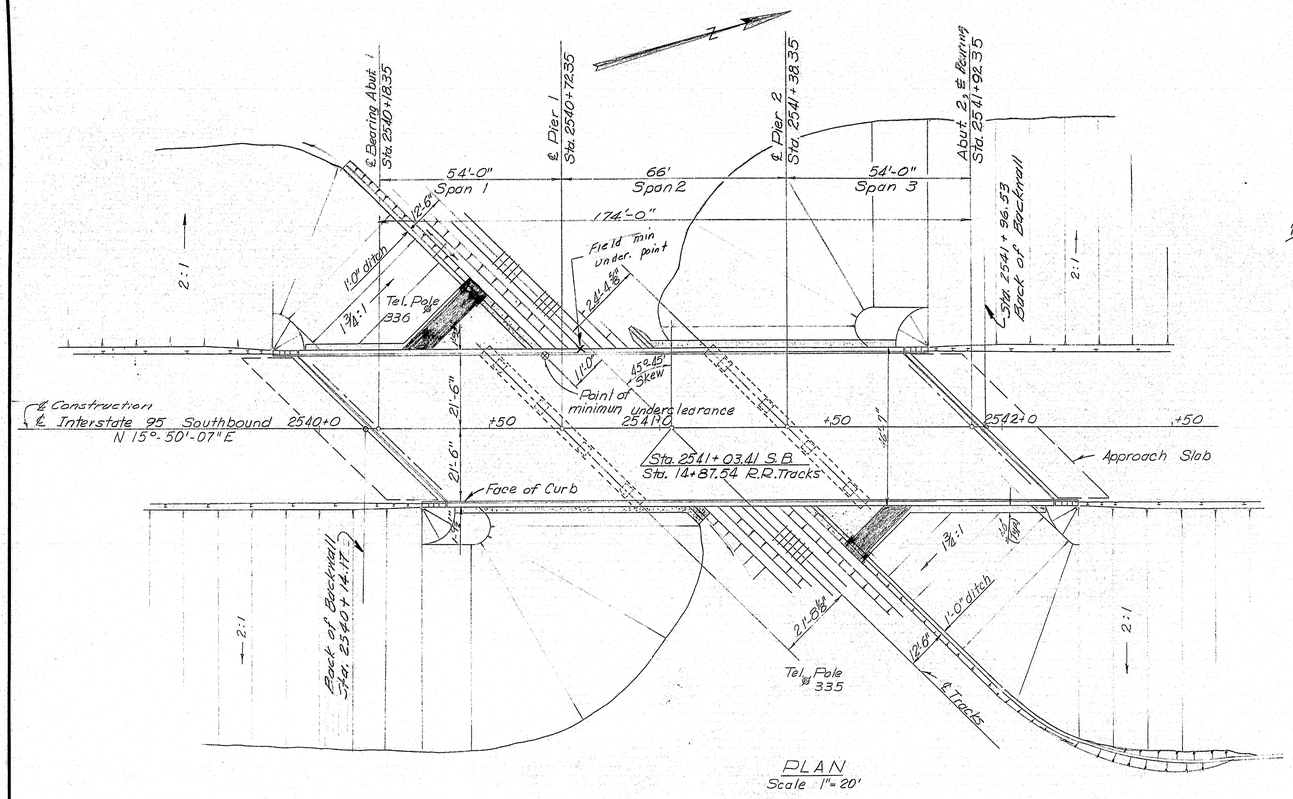

PLAN
Scale 1"=20'

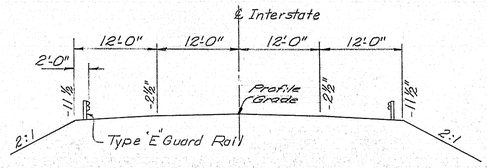

INTERSTATE APPROACH SECTION
Scale 1"=10'

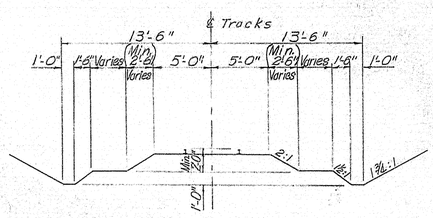

TRANSVERSE RAILROAD SECTION AT BRIDGE
Scale 1" = 6'

GENERAL NOTES

Specifications

Design: AASHO, Standard Specifications for Highway Bridges, 1961, with Interim Specifications 1961, 1962, 1963, & 1964.

Contract: State of Maine, State Highway Commission, Standard Specifications for Highways and Bridges, Revision 1956 and Supplemental Specifications dated February 1960.

Live Loading: HS 20-44 as Modified for Interstate.

Allowable Stresses: Concrete (n=10) ~ f_c = 1200 psi.
Reinforcing Steel, Intermediate Grade ~ f_s = 20,000 psi.
Structural Steel, A36 ~ f_s = 20,000 psi.

Concrete Classification: All Portland Cement Concrete to be Class 'A'

Structural Steel Classification: See Sheet #11 of 14, "Structural Steel."

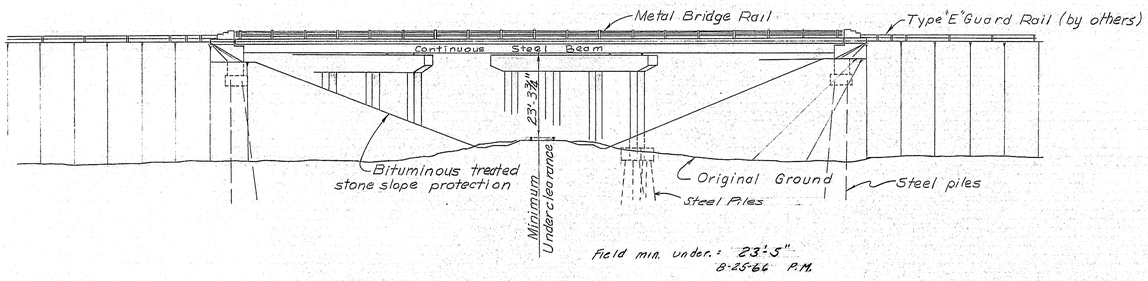

ELEVATION
Scale 1"=20'

DESIGN– TRACE– E. Barnard DET. E. Barnard CHECK– C.D.H.	BRIDGE NO. SURVEY– PLOT–

STATE HIGHWAY COMMISSION
BRIDGE DIVISION

INTERSTATE 95
OVER
CANADIAN PACIFIC RAILWAY
IN
T2R8
PENOBSCOT COUNTY

GENERAL PLAN

SHEET 3 OF 14 AUGUSTA, MAINE JAN. 1965

95-151

0 1 2 3 4 5 INCHES

B. P. R. REG. NO.	STATE	PROJECT NUMBER	SHEET NO.	TOTAL SHEETS
1	MAINE	I-95-8(61)	4	26

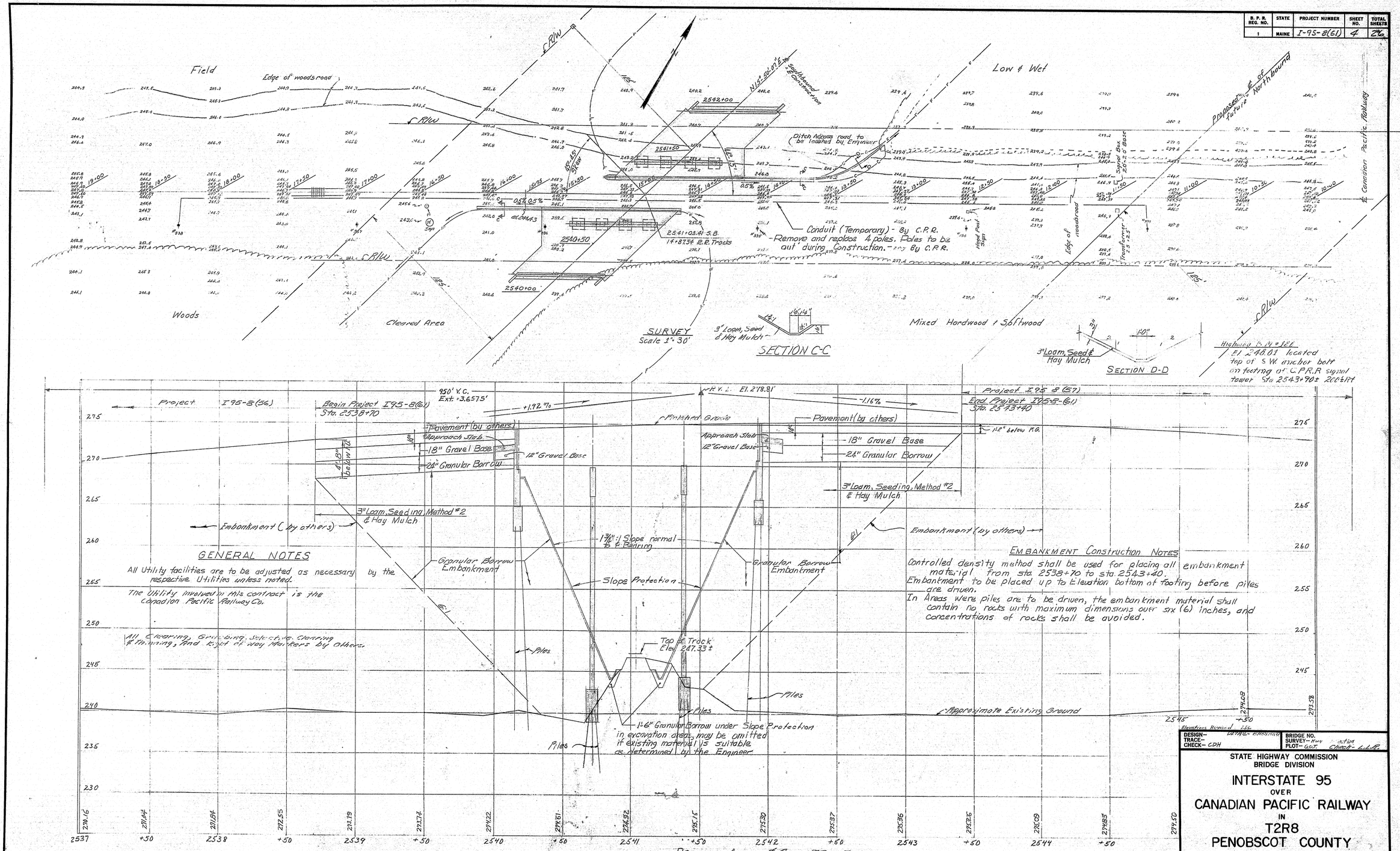

GENERAL NOTES

All Utility facilities are to be adjusted as necessary by the respective Utilities unless noted.

The Utility involved in this contract is the Canadian Pacific Railway Co.

All Clearing, Grubbing, Selective Clearing & Thinning, and Right of Way Markers by Others.

EMBANKMENT Construction NOTES

Controlled density method shall be used for placing all embankment material from sta. 2538+70 to sta. 2543+40.

Embankment to be placed up to Elevation bottom of footing before piles are driven.

In Areas were piles are to be driven, the embankment material shall contain no rocks with maximum dimensions over six (6) inches, and concentrations of rocks shall be avoided.

PROFILE ALONG ℄ CONSTRUCTION

Scales: Horz. = 1" = 20'; Vert. - 1" = 5'

STATE HIGHWAY COMMISSION
BRIDGE DIVISION

INTERSTATE 95
OVER
CANADIAN PACIFIC RAILWAY
IN
T2R8
PENOBSCOT COUNTY

SURVEY

SHEET 4 OF 14 AUGUSTA, MAINE NOV. 1964

95-152

G. B. CO., NO. 44-131 26759

0 1 2 3 4 5 INCHES

B. P. R. REG. NO.	STATE	PROJECT NUMBER	SHEET NO.	TOTAL SHEETS
1	MAINE	I-95-8(61)	5	26

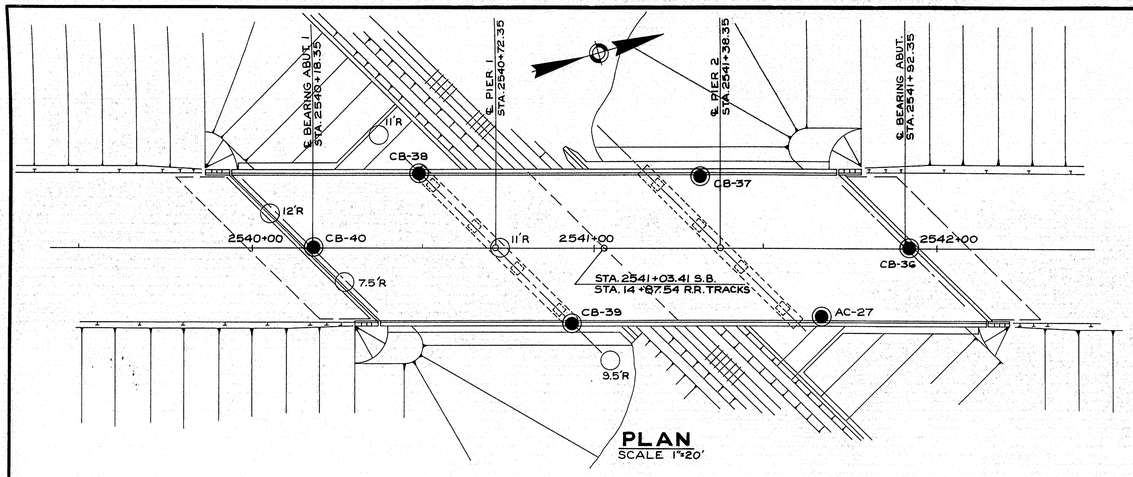

PLAN
SCALE 1"=20'

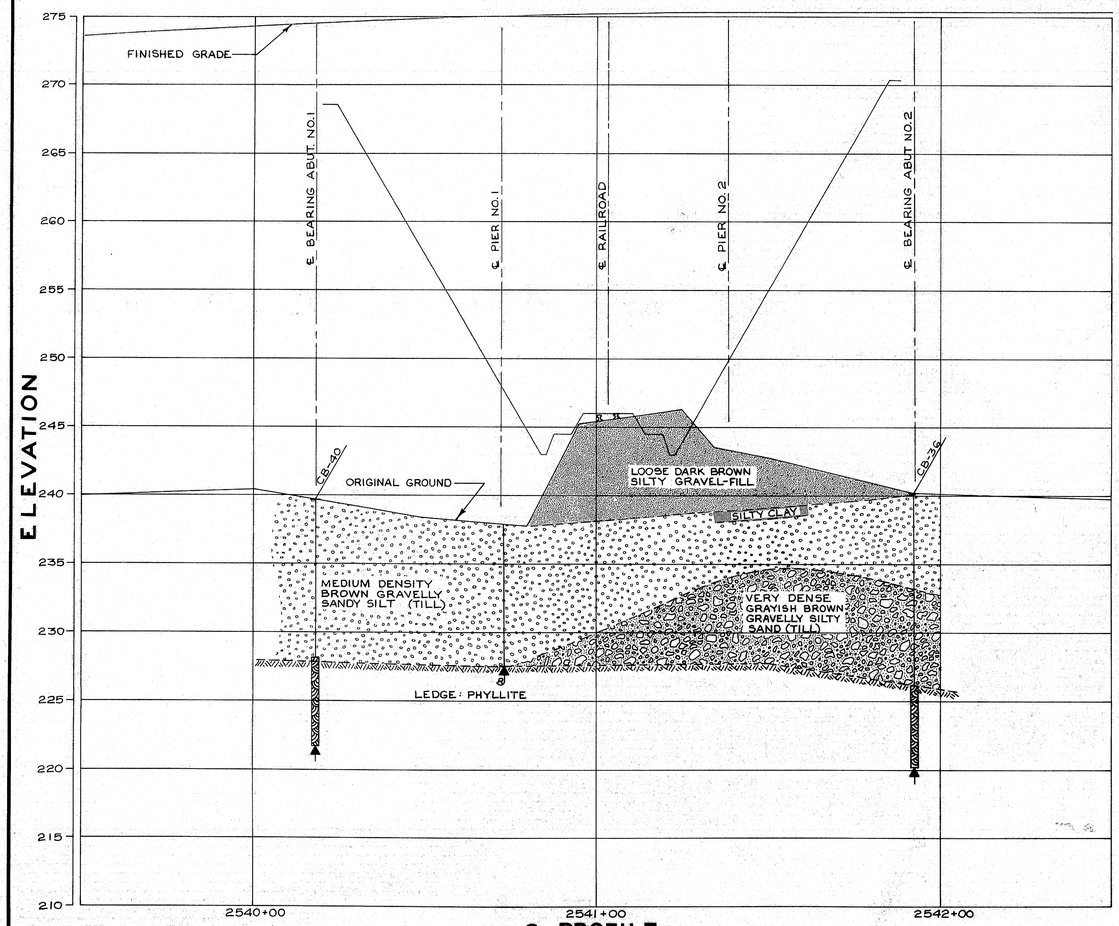

℄ PROFILE
SCALES: HORIZ. 1"=20' VERT. 1"=5'

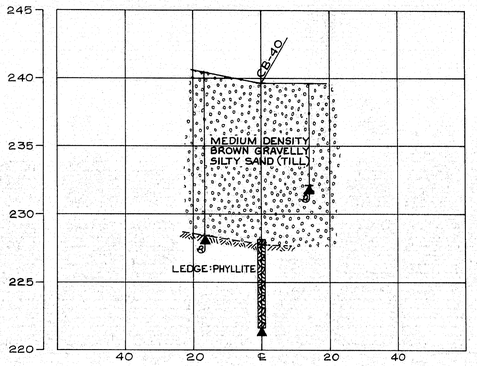

TRANSVERSE PROFILE ABUT. NO. 1

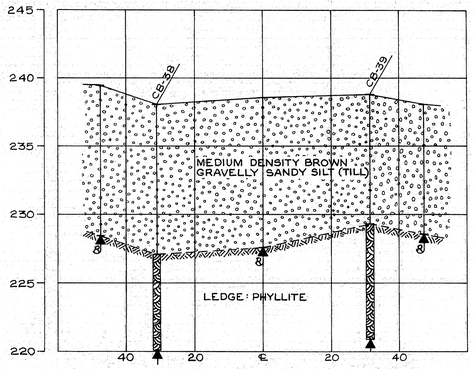

TRANSVERSE PROFILE PIER NO. 1

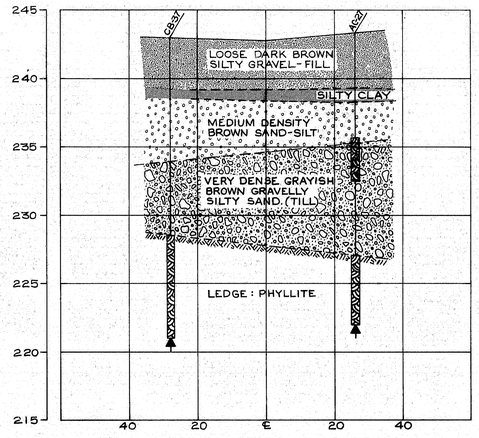

TRANSVERSE PROFILE PIER NO. 2

BORING AC-27
STA. 2541+67 20'RT. PIER NO. 2

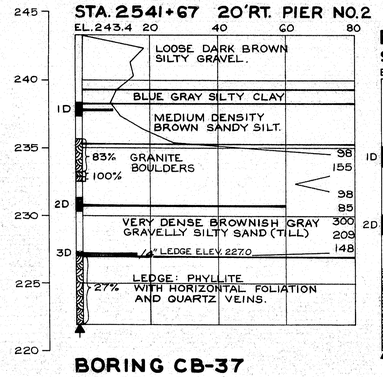

BORING CB-36
STA. 2541+92 ℄ ABUT. NO. 2

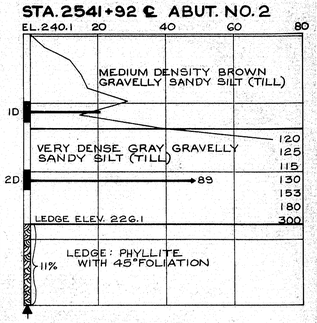

BORING CB-37
STA. 2541+31 21'LT. PIER NO. 2

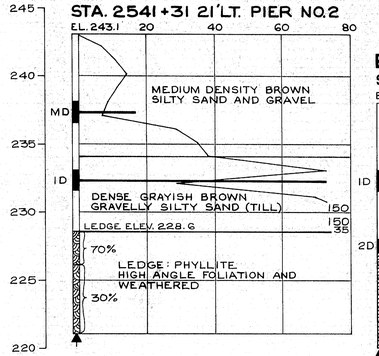

BORING CB-38
STA. 2540+49 22'LT. PIER NO. 1

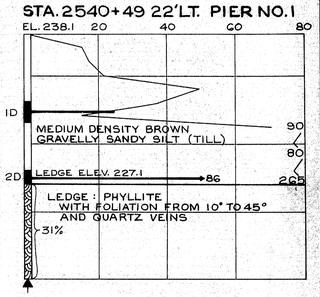

BORING CB-39
STA. 2540+94 22'RT. PIER NO. 1

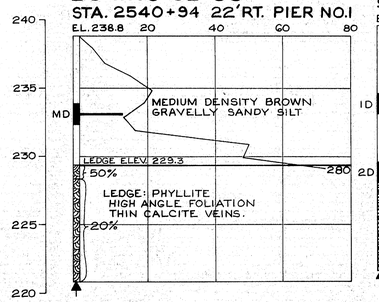

BORING CB-40
STA. 2540+18 ℄ ABUT. NO. 1

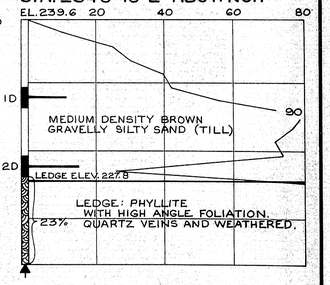

BORING NOTES

- Casing size 2½"
- All samples are made ahead of casing.
- Number of blows required to drive extra heavy casing one foot with 400 ft. lbs. of energy per blow.
- Location of sample or sample attempt.
- Number and type of dry sample.
- ID — S & H Sampler #1290's
- MD — Unsuccessful sample attempt and type of sampler.
- Number of blows required to drive spoon one foot with 350 ft. lbs. of energy per blow.
- Bottom of boring (may not be bottom of soil strata)
- 71% — Locations cored by diamond bit and per cent recovery of rock.

DESIGN–
TRACE– RSK
CHECK– SOILS DIVISION

BRIDGE NO.
SURVEY–
PLOT–

STATE HIGHWAY COMMISSION
BRIDGE DIVISION

INTERSTATE 95
OVER
CANADIAN PACIFIC RAILWAY
IN
T2R8
PENOBSCOT COUNTY

FOUNDATION SURVEY

SHEET 5 OF 14 AUGUSTA, MAINE DEC. 1964

95-153

0 1 2 3 4 5 INCHES

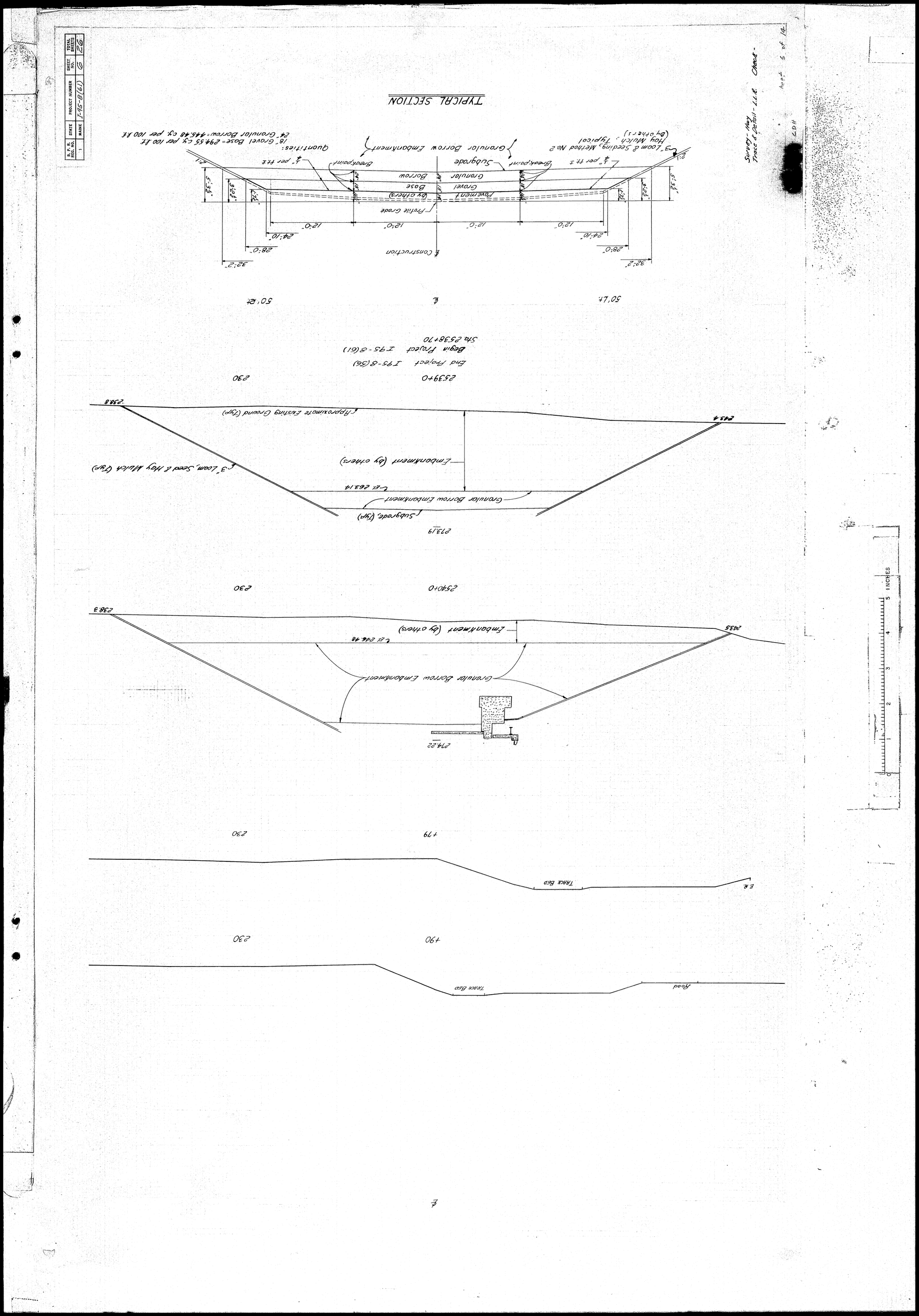

TYPICAL SECTION
Quantities:
18" Gravel Base = 294.55 c.y. per 100 lf.
24" Granular Borrow = 445.48 c.y. per 100 lf.
Granular Borrow Embankment
Subgrade
Breakpoint
Granular Borrow
Gravel Base
Pavement (by others)
Profile Grade
℄ Construction
3" Loam & Seeding, Method No. 2
Hay Mulch, Typical (by others)
Survey - Hay
Trace & Detail - L.L.R. Check -
Sheet 5 of 14
50' Lt.
50' Rt.
Sta 2538+70
Begin Project I-95-8(61)
End Project I-95-8(56)
2539+0
230
238.8
243.4
Approximate Existing Ground (Typ.)
Embankment (by others)
3" Loam, Seed & Hay Mulch (Typ.)
El. 263.14
Granular Borrow Embankment
Subgrade, (Typ.)
273.19
2540+0
230
238.3
243.5
Embankment (by others)
El. 246.48
Granular Borrow Embankment
274.22
+79
230
Track Bed
E.R.
+90
230
Track Bed
Road

B. P. R. REG. NO.	STATE	PROJECT NUMBER	SHEET NO.	TOTAL SHEETS
1	MAINE	I-95-8(61)	7	26

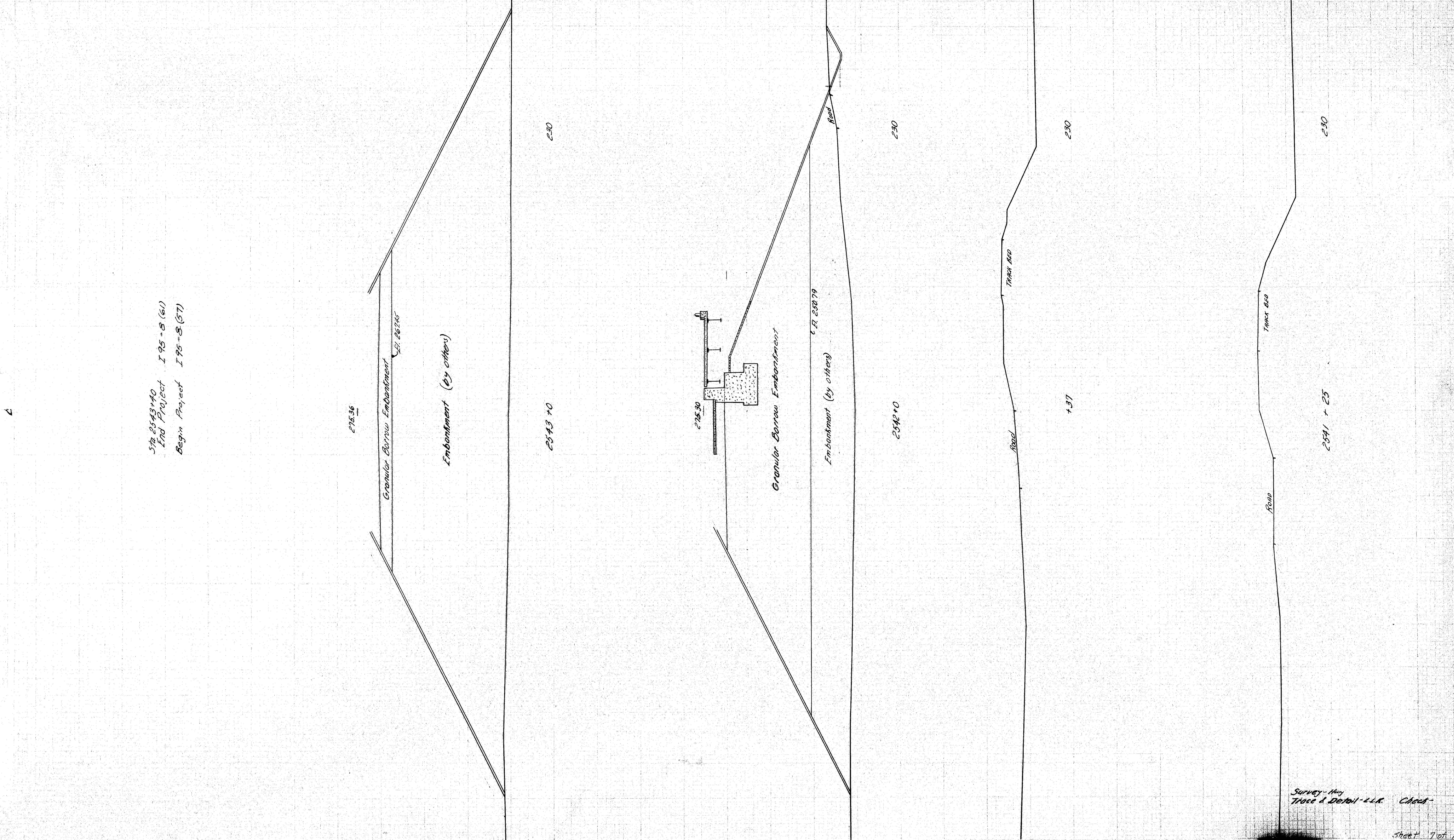

Survey - Hwy
Trace & Detail - L.L.R. Check -

Sheet 7 of 14

✓ CDH

0 1 2 3 4 5 INCHES

B. P. R. REG. NO.	STATE	PROJECT NUMBER	SHEET NO.	TOTAL SHEETS
1	MAINE	I-95-8(61)	8	26

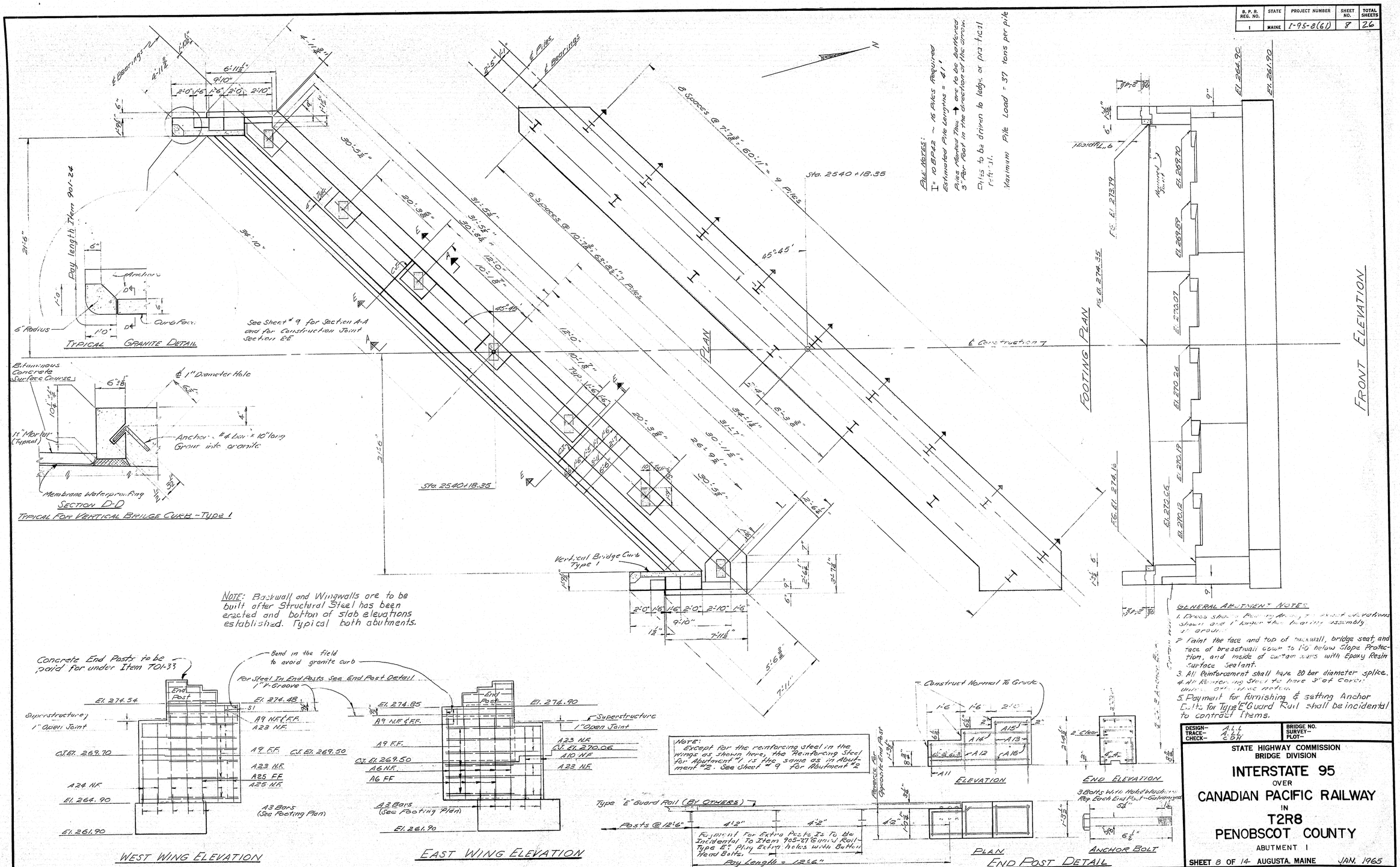

B. P. R. REG. NO.	STATE	PROJECT NUMBER	SHEET NO.	TOTAL SHEETS
1	MAINE	I-95-8(61)	9	26

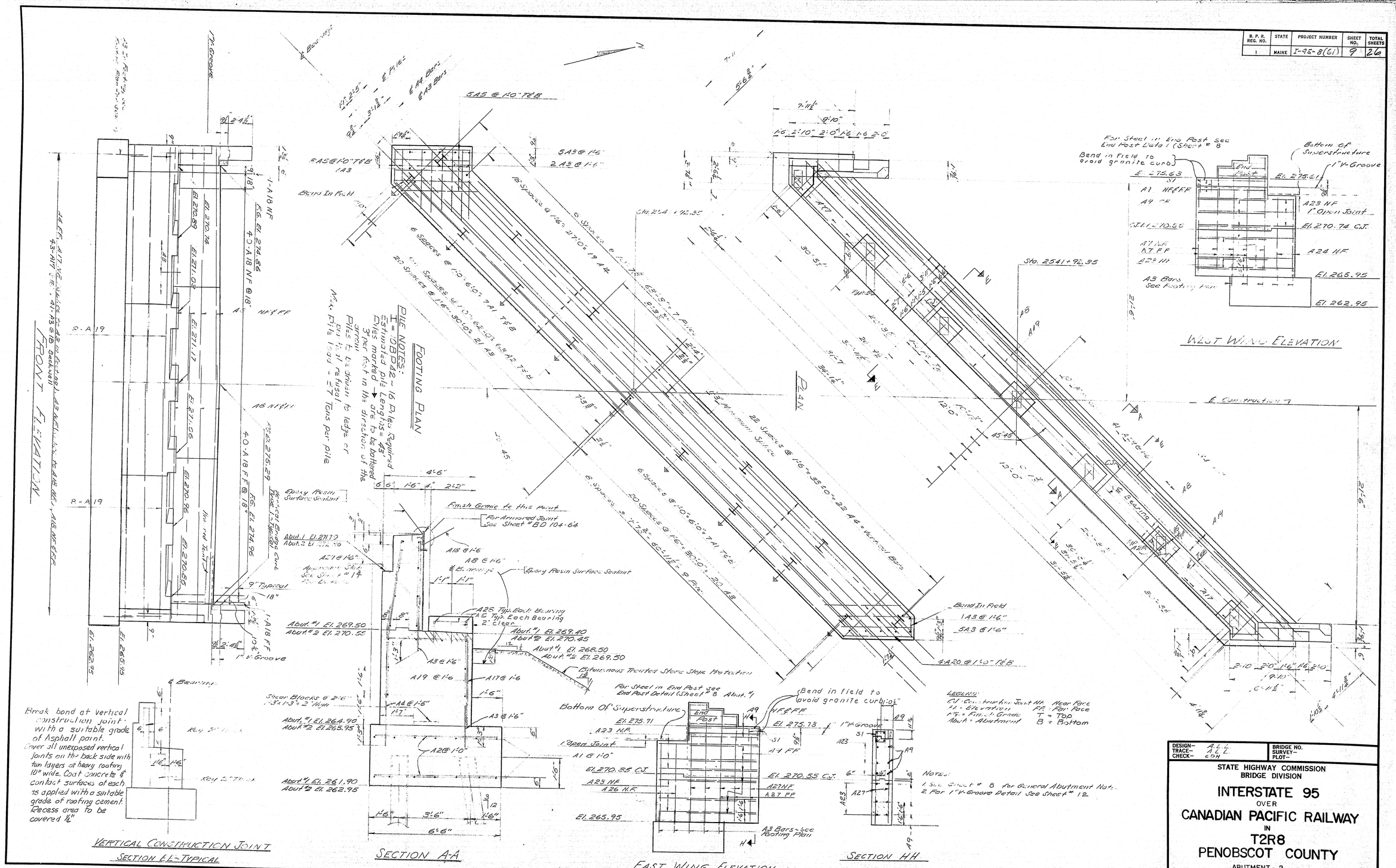

B. P. R. REG. NO.	STATE	PROJECT NUMBER	SHEET NO.	TOTAL SHEETS
1	MAINE	I-95-8(61)	10	26

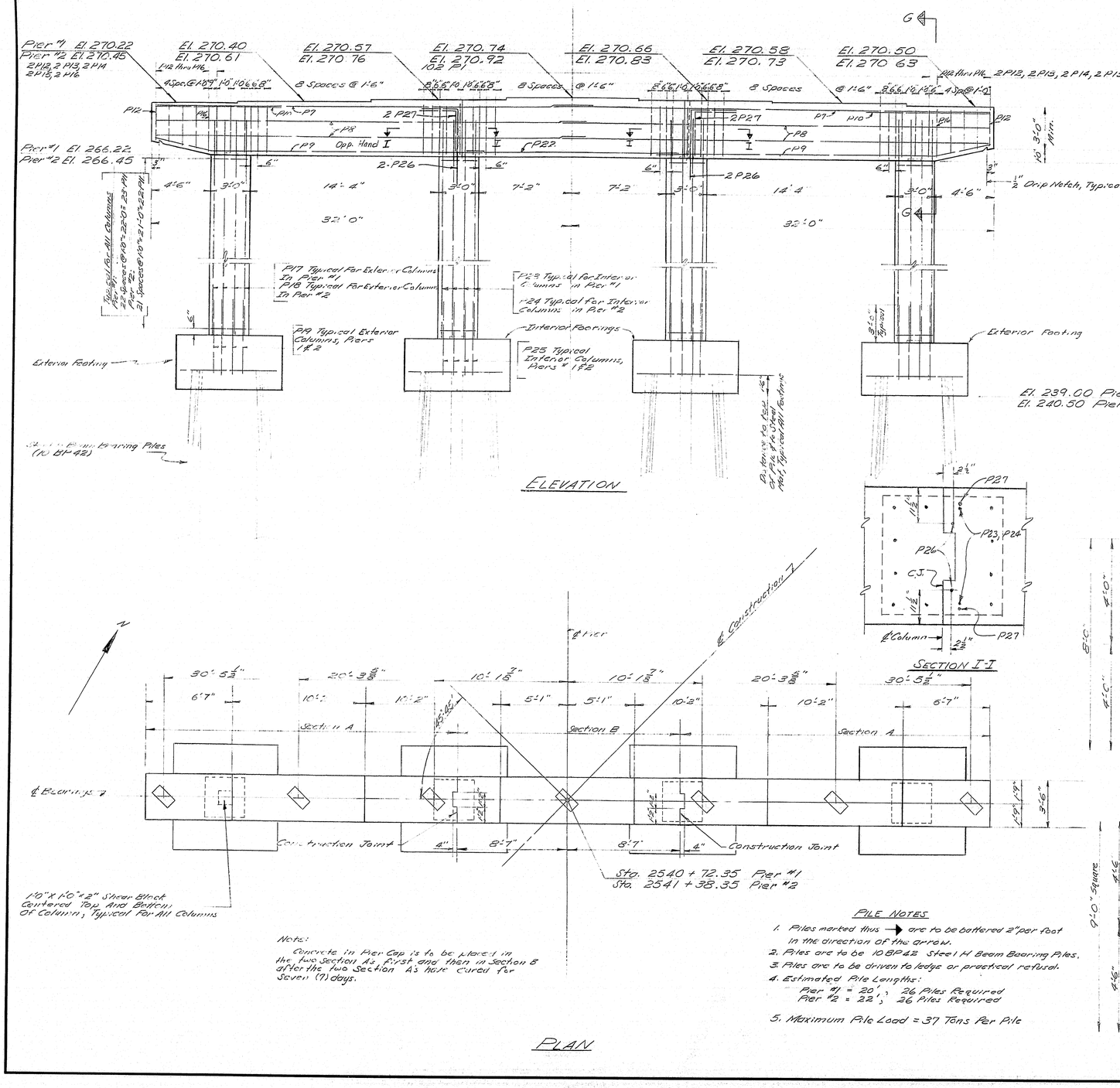

ELEVATION

SECTION I-I

Note:
Concrete in Pier Cap is to be placed in the two Section A first and then in Section B after the two Section A have cured for Seven (7) days.

PILE NOTES

1. Piles marked thus → are to be battered 2" per foot in the direction of the arrow.
2. Piles are to be 10BP42 Steel H Beam Bearing Piles.
3. Piles are to be driven to ledge or practical refusal.
4. Estimated Pile Lengths:
   Pier #1 = 20', 26 Piles Required
   Pier #2 = 22', 26 Piles Required
5. Maximum Pile Load = 37 Tons Per Pile

PLAN

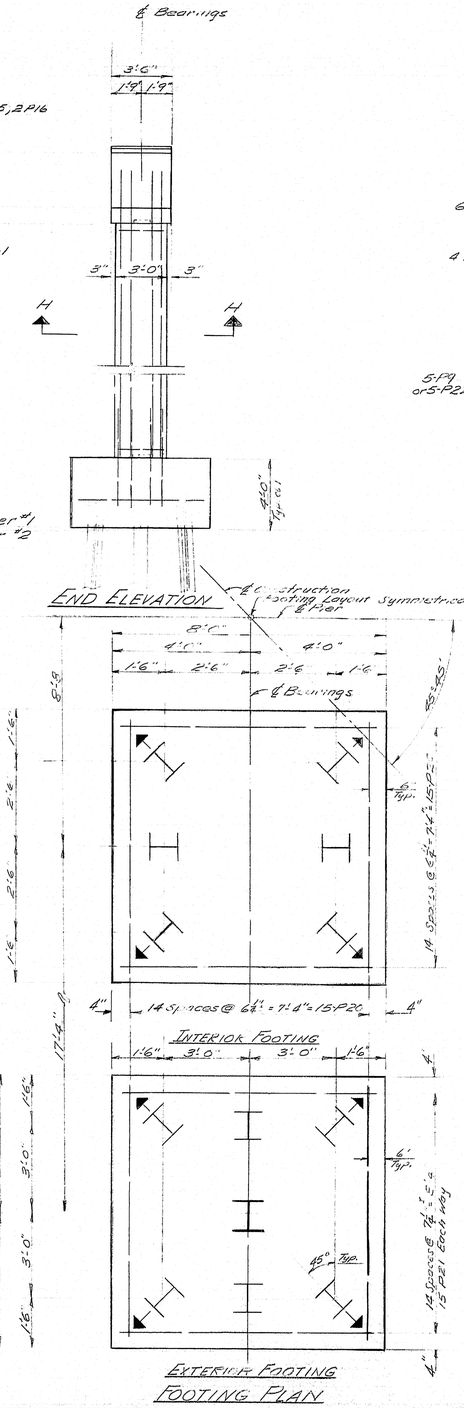

END ELEVATION

FOOTING PLAN

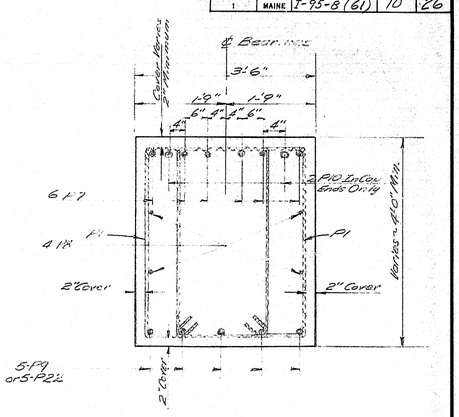

SECTION GG

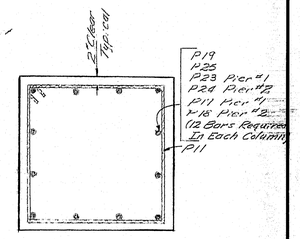

SECTION H H

GENERAL PIER NOTES

1. Press shaded bearing areas to exact elevations shown, and 1" larger all around than masonry plate.
2. Chamfer all exposed edges of concrete ¾".
3. Place reinforcing steel to clear anchor bolts.
4. Reinforcing steel to have 2" of cover unless otherwise noted.
5. Place embankment up to Elevation of bottom of footings before driving piles.

DESIGN-A.L.L. TRACE-A.L.L. CHECK-C.P.H.	BRIDGE NO. SURVEY- PLOT-

STATE HIGHWAY COMMISSION
BRIDGE DIVISION

INTERSTATE 95
OVER
CANADIAN PACIFIC RAILWAY
IN
T2R8
PENOBSCOT COUNTY
PIERS

SHEET 10 OF 12 AUGUSTA, MAINE JAN. 1965

95-158

0 1 2 3 4 5 INCHES

B. P. R. REG. NO.	STATE	PROJECT NUMBER	SHEET NO.	TOTAL SHEETS
1	MAINE	I-95-B(61)	11	26

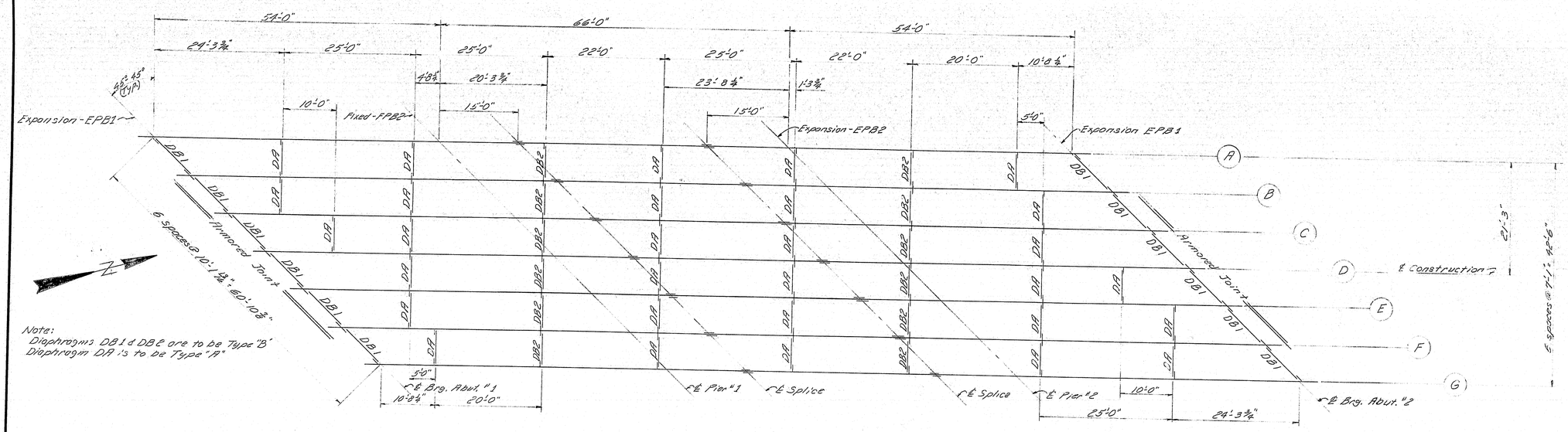

Note:
Diaphragms DB1 & DB2 are to be Type "B"
Diaphragm DA is to be Type "A"

FRAMING PLAN

All dimensions are horizontal

SPECIFICATIONS

Fabrication & Erection: State of Maine, State Highway Commission, Standard Specifications for Highways & Bridges, Revision of Jan. 1958 and Supplemental Specifications of Feb. 1960.
Design & Detail: A.A.S.H.O. Standard Specifications for Highway Bridges, 1961, and Interim Specifications, 1961 thru 1964.
Materials: All materials shall conform to A.S.T.M. designation A-36, except as otherwise noted on the Standard Details.

REFERENCES

Splice - See Standard Details BD 103-64
Diaphragms - See Standard Details BD 104-64
Pedestals - See Standard Details BD 101-64
Armored Joint - See Standard Details BD 104-64

PEDESTALS

14 - EPB1 required
7 - EPB2 required
7 - FPB2 required

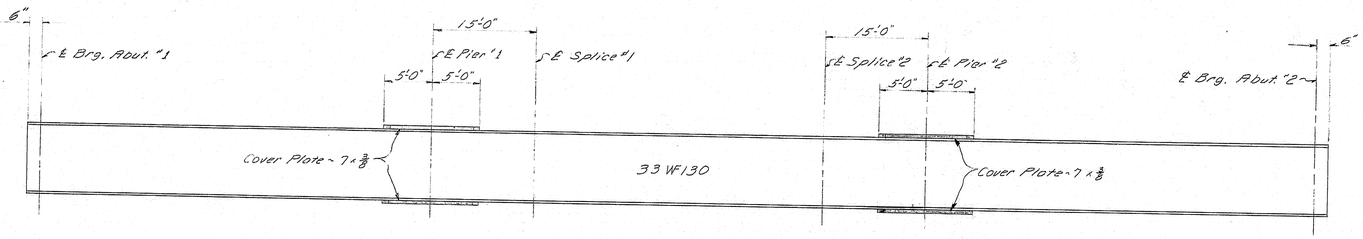

TYPICAL BEAM ELEVATION

All dimensions are horizontal
No camber required
(Place any natural camber up)

BEAM GRADES

Beam	Abut. "1 to Splice "1	Splice "1 to Splice "2	Splice "2 to Abut. "2
A	+0.71222 %	+0.60556 %	+0.47907 %
B	+0.69370 %	+0.56528 %	+0.46056 %
C	+0.67519 %	+0.52528 %	+0.44204 %
D	+0.63815 %	+0.52833 %	+0.40500 %
E	+0.61963 %	+0.52389 %	+0.38796 %
F	+0.60111 %	+0.47583 %	+0.36796 %
G	+0.56407 %	+0.44361 %	+0.34944 %

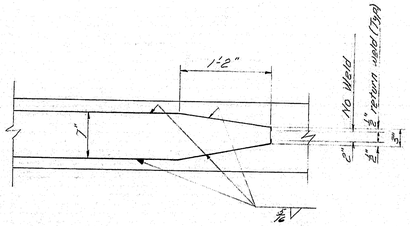

COVER PLATE DETAIL

DESIGN- L.L.F.
TRACE- L.L.F.
CHECK- CPH

BRIDGE NO.
SURVEY-
PLOT-

STATE HIGHWAY COMMISSION
BRIDGE DIVISION

INTERSTATE 95
OVER
CANADIAN PACIFIC RAILWAY
IN
T2R8
PENOBSCOT COUNTY

STRUCTURAL STEEL

SHEET 11 OF 14 AUGUSTA, MAINE JAN. 1965

95-159

0 1 2 3 4 5 INCHES

B. P. R. REG. NO.	STATE	PROJECT NUMBER	SHEET NO.	TOTAL SHEETS
1	MAINE	I-95-8(61)	12	26

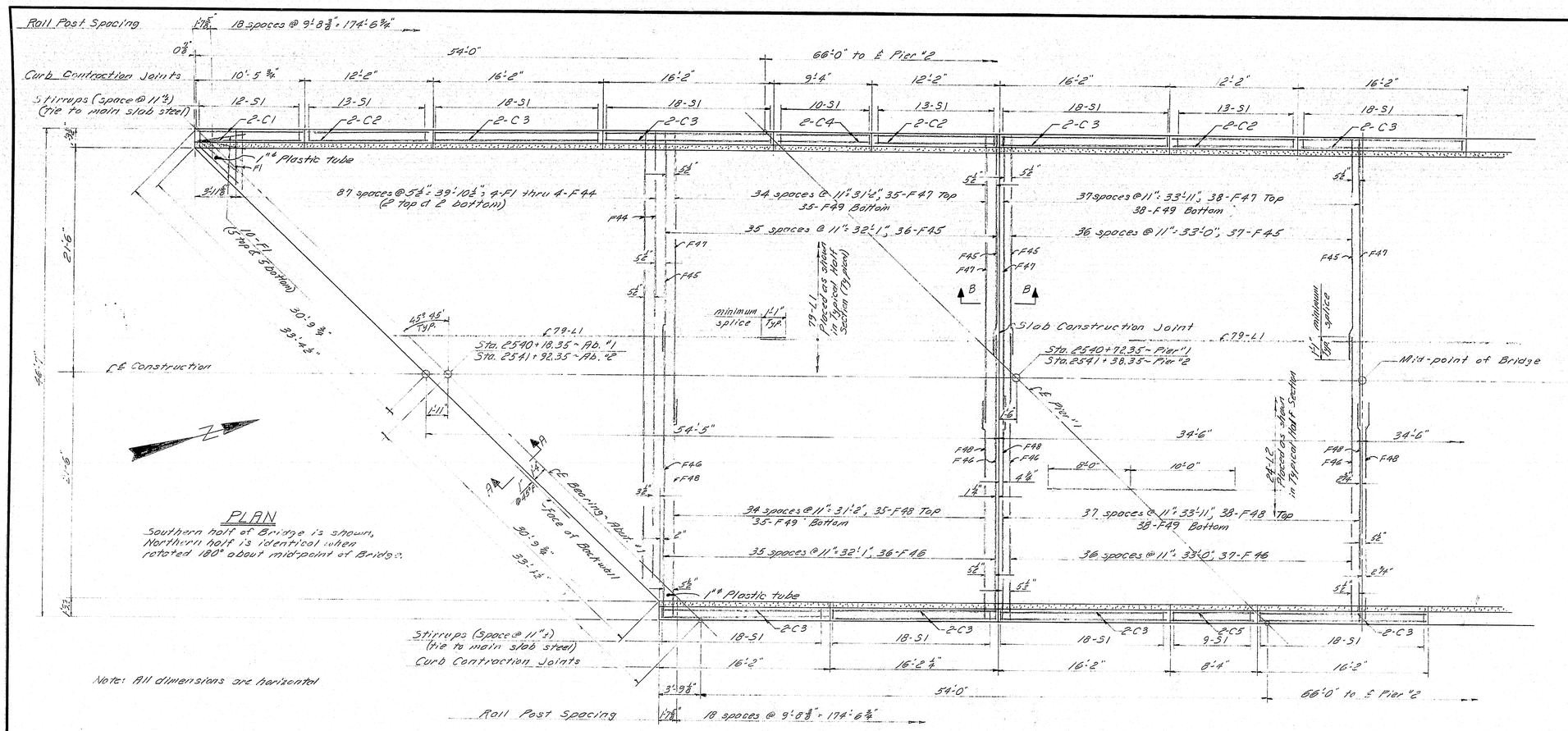

PLAN

Southern half of Bridge is shown. Northern half is identical when rotated 180° about mid-point of Bridge.

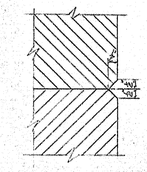

1" V-GROOVE DETAIL

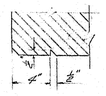

DRIP NOTCH DETAIL

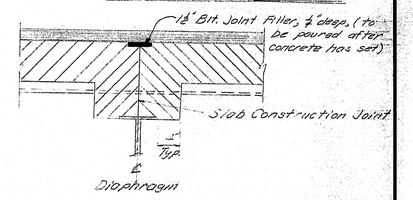

SECTION B-B

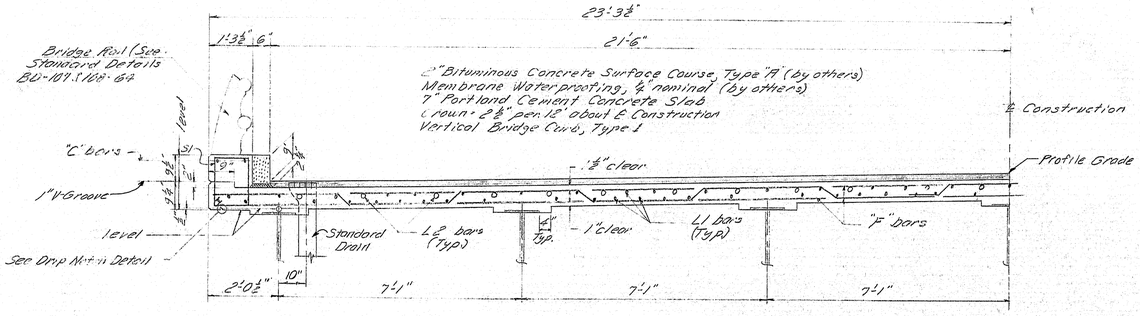

TYPICAL HALF-SECTION

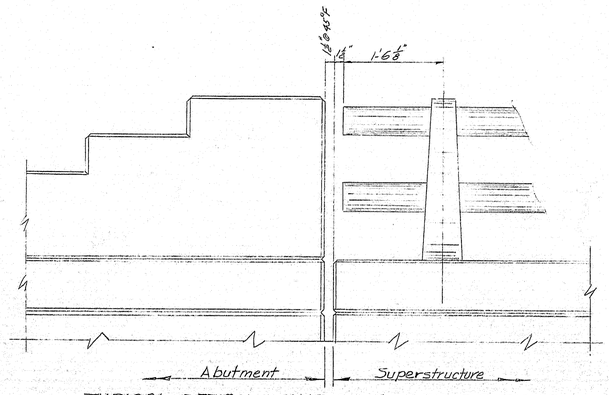

TYPICAL DETAIL @ END OF SUPERSTRUCTURE

NOTES.

See Sheet #13 for Sections A-A, for Typical Curb Contraction Joints for Blocking Details, and for Concrete Placement & Drain Location Plan.

For Typical Vertical Bridge Curb Detail, see Sheet #8 about #1, Section D-D.

Provide a 1"ø plastic tube drain extending through slab to 2" below bottom of slab at low points of superstructure adjacent to end dams. Place in order for drip to clear bridge seats. Do not cover with membrane waterproofing. Payment to be incidental to Item 701-40, P.C.C. Roadway & Sidewalk Slabs on Steel Bridges.

DESIGN– L.L.R.
TRACE– L.L.R.
CHECK– C.P.H.
PLOT–
BRIDGE NO.
SURVEY–

STATE HIGHWAY COMMISSION
BRIDGE DIVISION

INTERSTATE 95
OVER
CANADIAN PACIFIC RAILWAY
IN
T2R8
PENOBSCOT COUNTY

SUPERSTRUCTURE

SHEET 12 OF 14 AUGUSTA, MAINE JAN. 1965

95-160

0 1 2 3 4 5 INCHES

B. P. R. REG. NO.	STATE	PROJECT NUMBER	SHEET NO.	TOTAL SHEETS
1	MAINE	I-95-8(61)	13	26

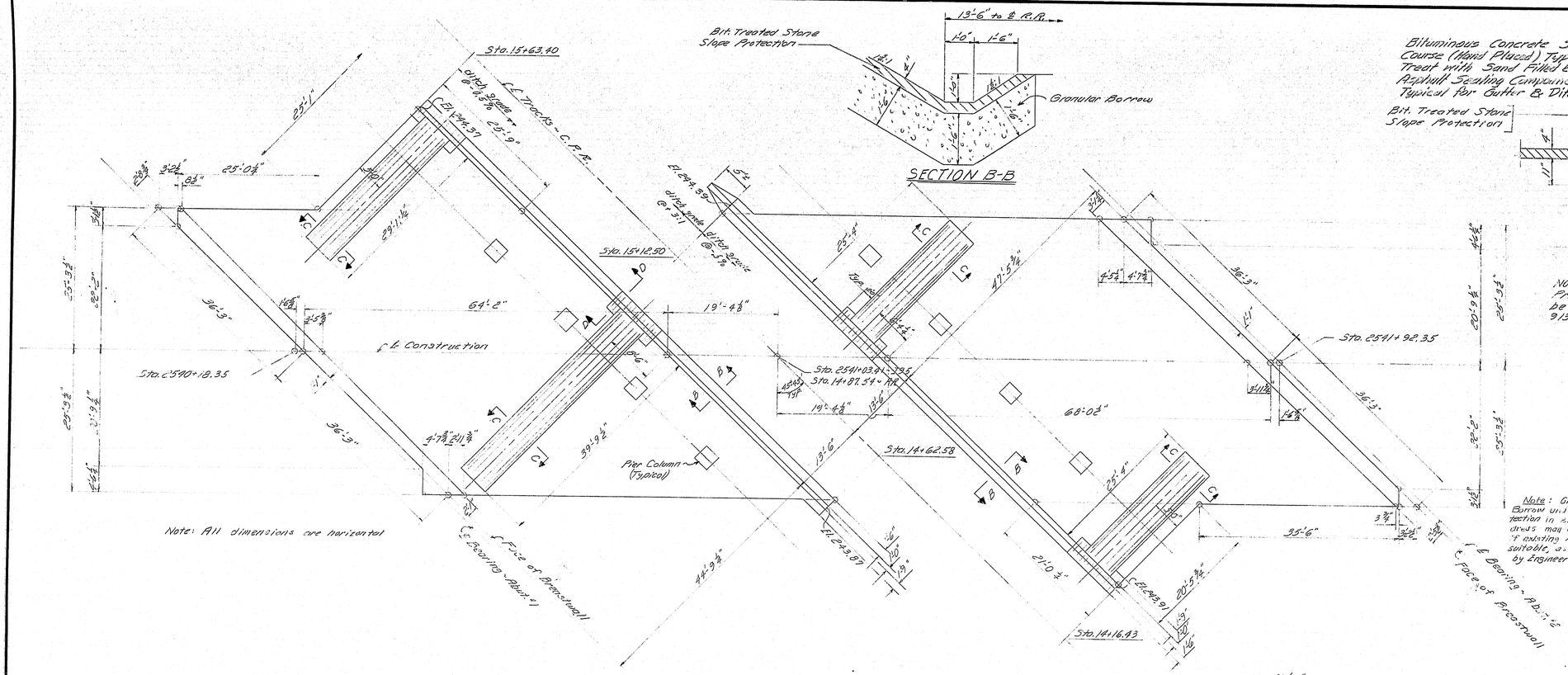

SECTION B-B

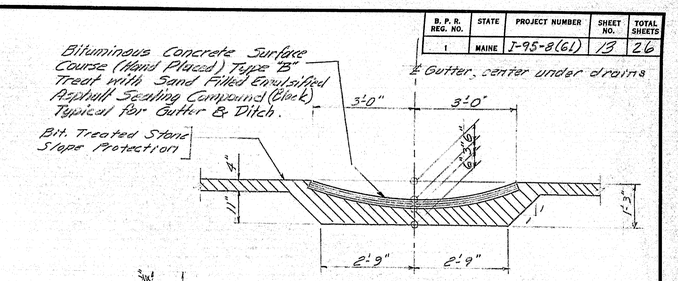

SECTION C-C

"BITUMINOUS CONCRETE GUTTER"

NOTE: Payment for Bit. Treated Stone Slope Protection placed beneath the gutter, shall be made at the contract unit price for Item 913-B, "Bit. Treated Stone Slope Protection."

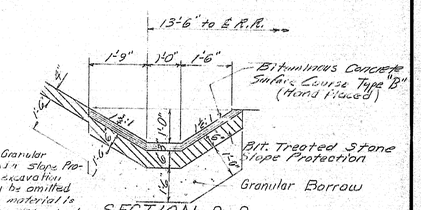

Note: Granular Borrow under Slope Protection in excavation areas may be omitted if existing material is suitable, as determined by Engineer in Field.

SECTION D-D

"BITUMINOUS CONCRETE DITCH"

Typical @ end of Bit. Concrete Gutter.

BITUMINOUS TREATED STONE SLOPE PROTECTION

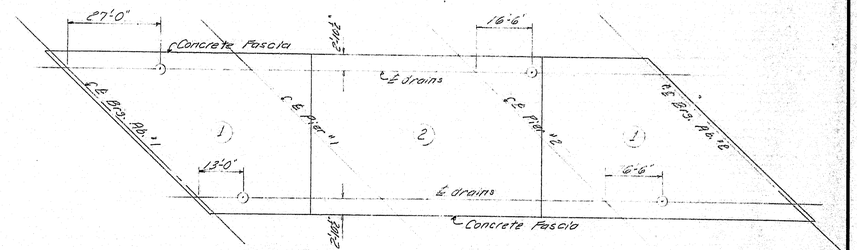

CONCRETE PLACEMENT & DRAIN LOCATION PLAN

NOTE: Panels ① are to be placed first, panel ② is to be placed last. See Standard Details, BD-104-64 for Drain Detail. ℄ of Drains are to be placed 2'-10½" off the concrete fascia of slab. 4 Drains are required.

*Δ_{DL} = Deflection due to dead load minus weight of steel.

BOTTOM OF SLAB ELEVATIONS

Beams	0.00' ℄ Brg. Ab. #1	10.80'	21.60'	32.40'	43.20'	54.00' ℄ Pier #1	65.00'	76.00'	87.00'	98.00'	109.00'	120.00' ℄ Pier #2	130.80'	141.60'	152.40'	163.20'	174.00' ℄ Brg. Ab. #2
	5 spaces @ 10.80' = 54'-0"						6 spaces @ 11.00' = 66'-0"						5 spaces @ 10.80' = 54'-0"				
A	273.05	273.16	273.26	273.34	273.41	273.47	273.56	273.64	273.72	273.77	273.82	273.87	273.93	273.99	274.04	274.07	274.08
B	273.23	273.34	273.44	273.52	273.58	273.65	273.73	273.81	273.88	273.94	273.98	274.03	274.08	274.14	274.19	274.22	274.23
C	273.42	273.53	273.62	273.69	273.76	273.82	273.90	273.98	274.05	274.10	274.14	274.18	274.24	274.29	274.34	274.36	274.37
D	273.60	273.71	273.80	273.87	273.93	273.99	274.06	274.14	274.21	274.26	274.29	274.34	274.39	274.44	274.48	274.51	274.51
E	273.54	273.64	273.73	273.80	273.85	273.91	273.98	274.06	274.12	274.17	274.20	274.24	274.29	274.34	274.38	274.40	274.41
F	273.47	273.57	273.65	273.72	273.78	273.83	273.90	273.97	274.03	274.08	274.11	274.15	274.19	274.24	274.28	274.30	274.30
G	273.40	273.50	273.58	273.65	273.70	273.75	273.82	273.89	273.95	273.99	274.02	274.05	274.09	274.14	274.17	274.19	274.19
Δ_{DL}*	0	.021	.030	.024	.009	0	.008	.022	.028	.022	.008	0	.009	.024	.030	.021	0

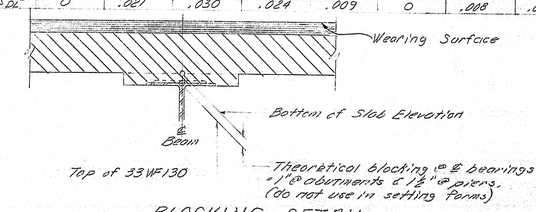

BLOCKING DETAIL

Note: In order that the Wearing Surface may conform to the profile and cross-sections shown on these Plans, the accompanying table of "Bottom of Slab Elevations" are given. These elevations, which are computed to compensate for dead load deflections, must be set before slab forms are started.

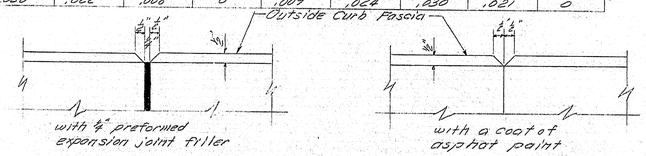

TYPICAL CURB CONTACTION JOINTS

NOTE: At contraction joints over ℄ piers use ½" preformed expansion joint filler for granite and concrete curbs. At all other contraction joints in curbs, break the bond between concrete surfaces with a suitable grade of asphalt paint.

Form a 1½" V-Groove on outside face of curb & slab at each joint.

Provide joints in the vertical bridge curb at all curb contraction joints.

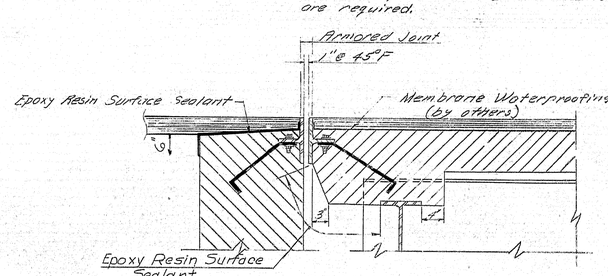

SECTION A-A

DESIGN– L. L. R.	BRIDGE NO.
TRACE– L. L. R.	SURVEY–
CHECK– C. D. H.	PLOT–

STATE HIGHWAY COMMISSION
BRIDGE DIVISION

INTERSTATE 95
OVER
CANADIAN PACIFIC RAILWAY
IN
T2R8
PENOBSCOT COUNTY

SLOPE PROTECTION & SUPERSTR. DETAILS

SHEET 13 OF 14 AUGUSTA, MAINE JAN. 1965

95-161

0 1 2 3 4 5 INCHES

B. P. R. REG. NO.	STATE	PROJECT NUMBER	SHEET NO.	TOTAL SHEETS
1	MAINE	I-95-8(61)	14	26

REINFORCING STEEL SCHEDULE

ABUTMENTS (Design: ALL Detail: ALL)

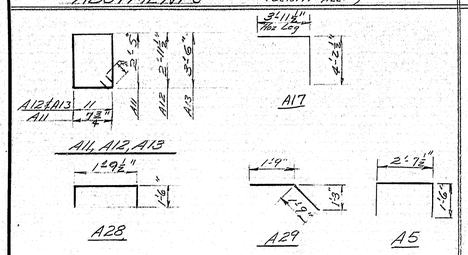

BENT BARS

Mark	Size	Number	Length	Location
A11	#5	4	6'-10"	End Post
A12	5	4	8'-5"	" "
A13	5	8	9'-5"	" "
A17	5	86	8'-2"	Breastwall
A28	4	28	4'-10"	Bearing Areas
A29	6	82	3'-6"	Abutment to Approach Slab
S1	5	8	5'-0"	Curbs (See Superstructure Sheet #)
A5	4	28	5'-8"	Bearing Areas

STRAIGHT BARS

Mark	Size	Number	Length	Location
A1	#6	56	32'-2"	Footings
A2	6	252	6'-0"	"
A3	5	193	2'-6"	Dowels - Footing to Breastwall & Breastwall to Backwall
A4	5	82	7'-2"	Footing to Breastwall to Backwall
A5	6	52	7'-6"	Footings
A6	5	9	9'-1"	W. Wing Abutment #2
A7	5	9	8'-9"	"
A9	5	40	6'-6"	All Wings
A10	5	2	8'-2"	E. Wing, Abutment #1
A14	4	8	3'-2"	End Posts
A15	4	8	1'-8"	" "
A16	4	16	4'-8"	" "
A18	5	164	4'-2	Backwalls
A19	5	32	34'-0"	Bridge Seat
A8	4	32	34'-0"	Backwall
A20	6	16	6'-5	Footing
A23	5	24	9'-4"	E. Wing Abutment #2 and W. Wing Abutment #1
A24	5	4	7'-10"	W. Wing Abutment #1 & #2
A25	5	8	8'-8"	" " " " #1
A26	5	2	7'-11"	E. Wing Abutment #2
A27	5	8	8'-9"	" " " "
A31	4	64	30'-3"	Approach Slab
A32	6	336	14'-6"	" "

SUPERSTRUCTURE (Design: LLR Detail: ALL)

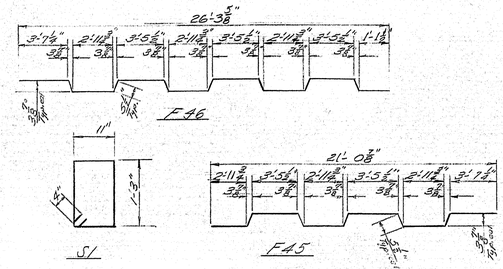

BENT BARS

Mark	Size	Number	Length	Location
F45	#5	146	21'-9"	Superstructure Slab
F46	#5	146	27'-3"	" "
S1	#5	392	5'-0"	Curbs (See Also Abutment Schedule)

STRAIGHT BARS

Mark	Size	Number	Length	Location
F1	#5	28	5'-4"	Slab
F2		8	6'-2"	
F3			7'-1"	
F4			8'-0"	
F5			8'-11"	
F6			9'-9"	
F7			10'-8"	
F8			11'-7"	
F9			12'-5"	
F10			13'-4"	
F11			14'-3"	
F12			15'-2"	
F13			16'-0"	
F14			16'-11"	
F15			17'-10"	
F16			18'-8"	
F17			19'-7"	
F18			20'-6"	
F19			21'-5"	
F20			22'-3"	
F21			23'-2"	
F22			24'-1"	
F23			24'-11"	
F24			25'-10"	
F25			26'-9"	
F26			27'-8"	
F27			28'-6"	
F28			29'-5"	
F29			30'-4"	
F30			31'-3"	
F31			32'-1"	
F32			33'-0"	
F33			33'-11"	
F34			34'-9"	
F35			35'-8"	
F36			36'-7"	
F37			37'-6"	
F38			38'-4"	
F39			39'-3"	
F40			40'-2"	
F41			41'-0"	
F42	#5	8	41'-11"	

PIERS (Design: ALL Detail: ALL)

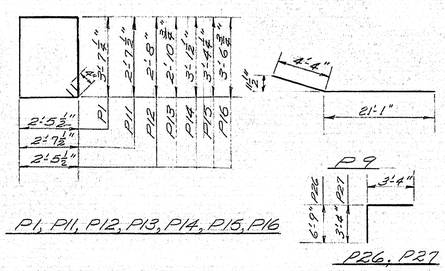

BENT BARS

Mark	Size	Number	Length	Location
P1	#5	204	12'-10"	Pier Cap
P11	4	157	11'-2"	Pier Columns
P12	5	8	10'-11"	Pier Cap - Cantilever Ends
P13	5	8	11'-5"	
P14	5	8	11'-10"	
P15	5	8	12'-4"	
P16	5	8	12'-9	
P9	10	20	25'-5"	Pier Cap
P26	8	8	10'-1"	Pier Columns - Dowels
P27	9	8	6'-8"	Pier Cap

STRAIGHT BARS

Mark	Size	Number	Length	Location
P7	#9	24	33'-6"	Pier Cap
P8	6	16	32'-6"	" "
P10	9	8	8'-6"	Cantilever End - Pier Cap
P17	11	24	26'-3"	Columns - Pier #1
P18	11	24	25'-0"	" - Pier #2
P19	11	48	7'-4"	Dowels - Footings to Columns
P20	6	120	7'-6"	Footings
P21	6	120	8'-6"	"
P22	10	10	17'-0"	Pier Cap
P23	9	24	26'-3	Columns - Pier #1
P24	9	24	25'-0"	" - Pier #2
P25	9	48	6'-0"	Dowels - Footings to Columns

Superstructure (Cont)

Mark	Size	Number	Length	Location
F43	#5	8	42'-10"	Slab
F44		8	43'-9"	do
F47		146	27'-2"	do
F48		146	20'-2"	do
F49	#5	292	23'-8"	do
L1	#5	395	36'-5"	
L2		48	18'-0"	
C1		4	10'-2	Curbs
C2		12	11'-10"	
C3		28	15'-10	
C4		4	9'-0"	Curbs
C5	#5	4	8'-0"	do

All reinforcing steel to be intermediate grade.
Dimensions to ℄ of bars.

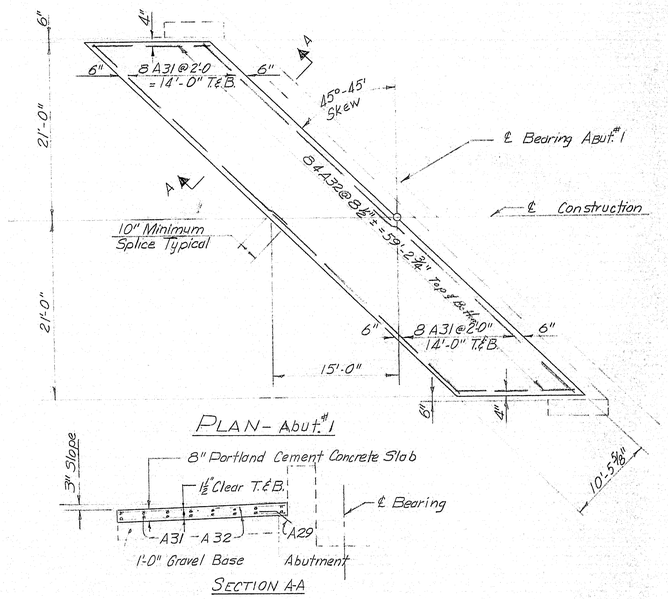

APPROACH SLABS

Abut #2 is the same when rotated 180° as Abut. #1 shown. (Design: E.B. Detail: E.B.)

Approach slab concrete to be paid for under Item 701-33 Portland Cement Concrete, Abutments and Retaining Walls.

DESIGN-ALL - LLR & E.B.
TRACE- ALL - E.B.
CHECK- CDH

BRIDGE NO.
SURVEY-
PLOT-

STATE HIGHWAY COMMISSION
BRIDGE DIVISION

INTERSTATE 95
OVER
CANADIAN PACIFIC RAILWAY
IN
T2R8
PENOBSCOT COUNTY

REINFORCING STEEL & APPROACH SLABS

SHEET 14 OF 14 AUGUSTA, MAINE JAN. 1965

95-162

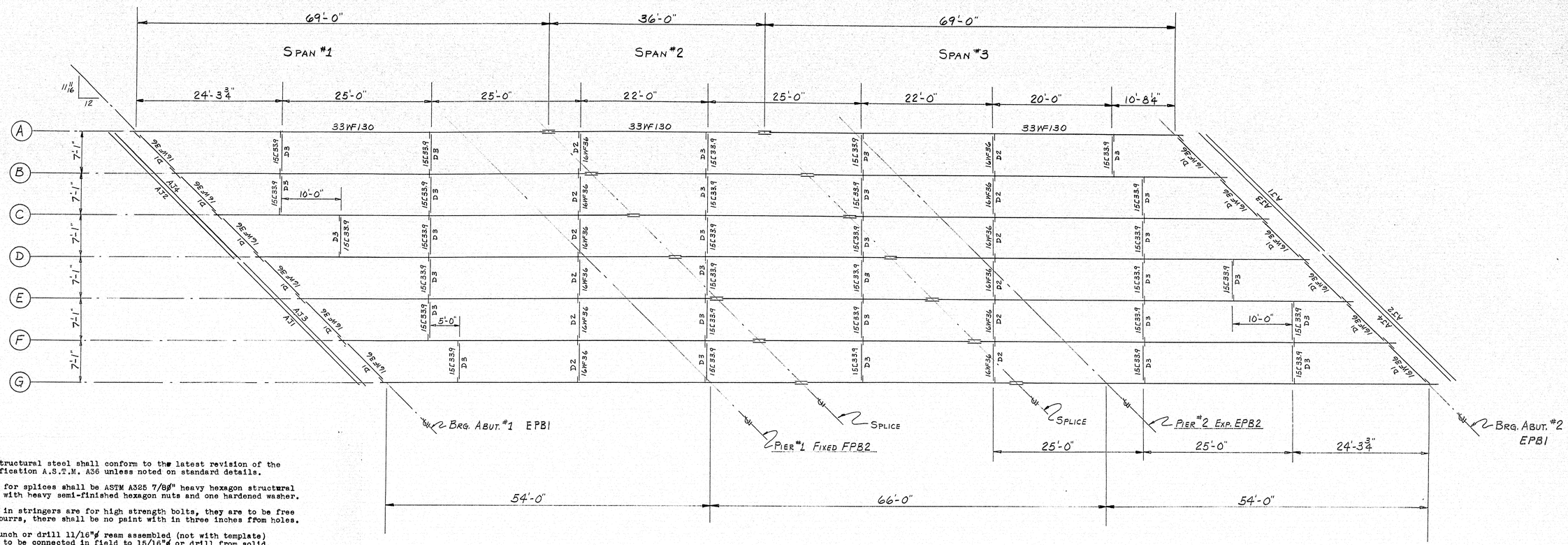

FRAMING PLAN

All structural steel shall conform to the latest revision of the specification A.S.T.M. A36 unless noted on standard details.

Bolts for splices shall be ASTM A325 7/8ø" heavy hexagon structural bolts with heavy semi-finished hexagon nuts and one hardened washer.

Holes in stringers are for high strength bolts, they are to be free from burrs, there shall be no paint with in three inches from holes.

Sub punch or drill 11/16"ø ream assembled (not with template) parts to be connected in field to 15/16"ø or drill from solid. Match mark all connecting parts before disassembling and supply Engineer with a diagram showing match marks.

Fabricate and erect in accordance with M.S.H.O. standard specifications.

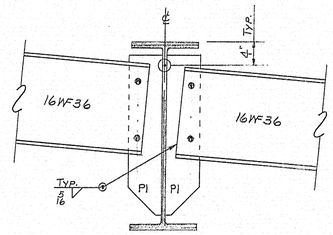

DIAPHRAGM CONNECTION

48- 7/8"ø x 3 1/2" H.S. BOLTS (FLANGE) PER. SPLICE
54- 7/8"ø x 3" H.S. BOLTS (WEB) PER. SPLICE

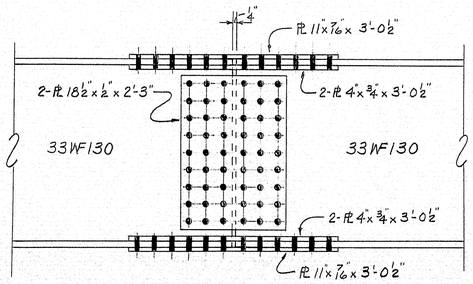

TYP. SPLICE DETAIL

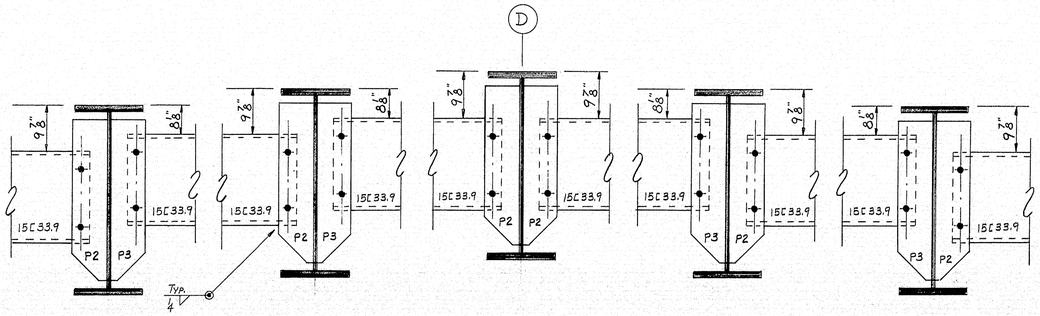

DIAPHRAGM CONNECTION

SHOP CONNECTIONS: WELD & BOLT
FIELD CONNECTIONS: WELD & BOLT
HOLES: AS NOTED
PAINT: STATE OF MAINE SPEC.

PROJ. No. I-95-8(61) 222 APP. 8-16-65

FRAMING PLAN

PRINT ISSUE		
3	CUST.	8-18-65
2	S.H.C.	8-18-65
1	SHOP	8-18-65
2	F.A.	8-3-65
DRAWN	7-26-65	C.J.M.
REVISION		
REVISION		
REVISION		

Bancroft & Martin Inc.
Brewer, Maine

I-95 OVER CANADIAN PACIFIC RAILWAY
T2 R8 PENOBSCOT COUNTY, MAINE

CUSTOMER CIANCHETTE BROS. INC.
DESIGNER STATE HIGHWAY COMMISSION

ORDER VERBAL DWG. B65-130-E1

97-196 X

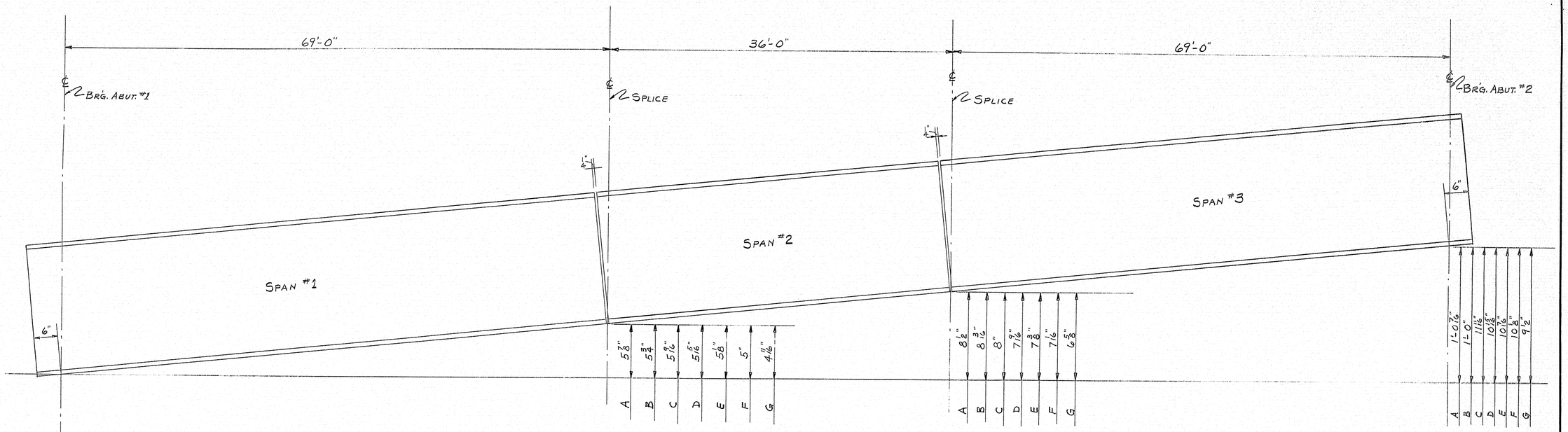

ELEVATION

SHOP CONNECTIONS:
FIELD CONNECTIONS:
HOLES:
PAINT:

PROJ. No. I-95-8(61) 222

ELEVATIONS

PRINT ISSUE			
APR 8-16-65			
2	S.H.C.	8-18-65	
3	CUST.	8-18-65	
1	SHOP	8-18-65	
2	F.A.	8-3-65	
DRAWN	8-3-65	C.J.M.	
REVISION			
REVISION			
REVISION			

Bancroft & Martin Inc.
Brewer, Maine

I-95 OVER CANADIAN PACIFIC RAILWAY
T2 R8 PENOBSCOT COUNTY, MAINE

CUSTOMER CIANCHETTE BROS. INC.
DESIGNER STATE HIGHWAY COMMISSION

ORDER VERBAL DWG. B65-130-E2

97-196 [redacted] Y

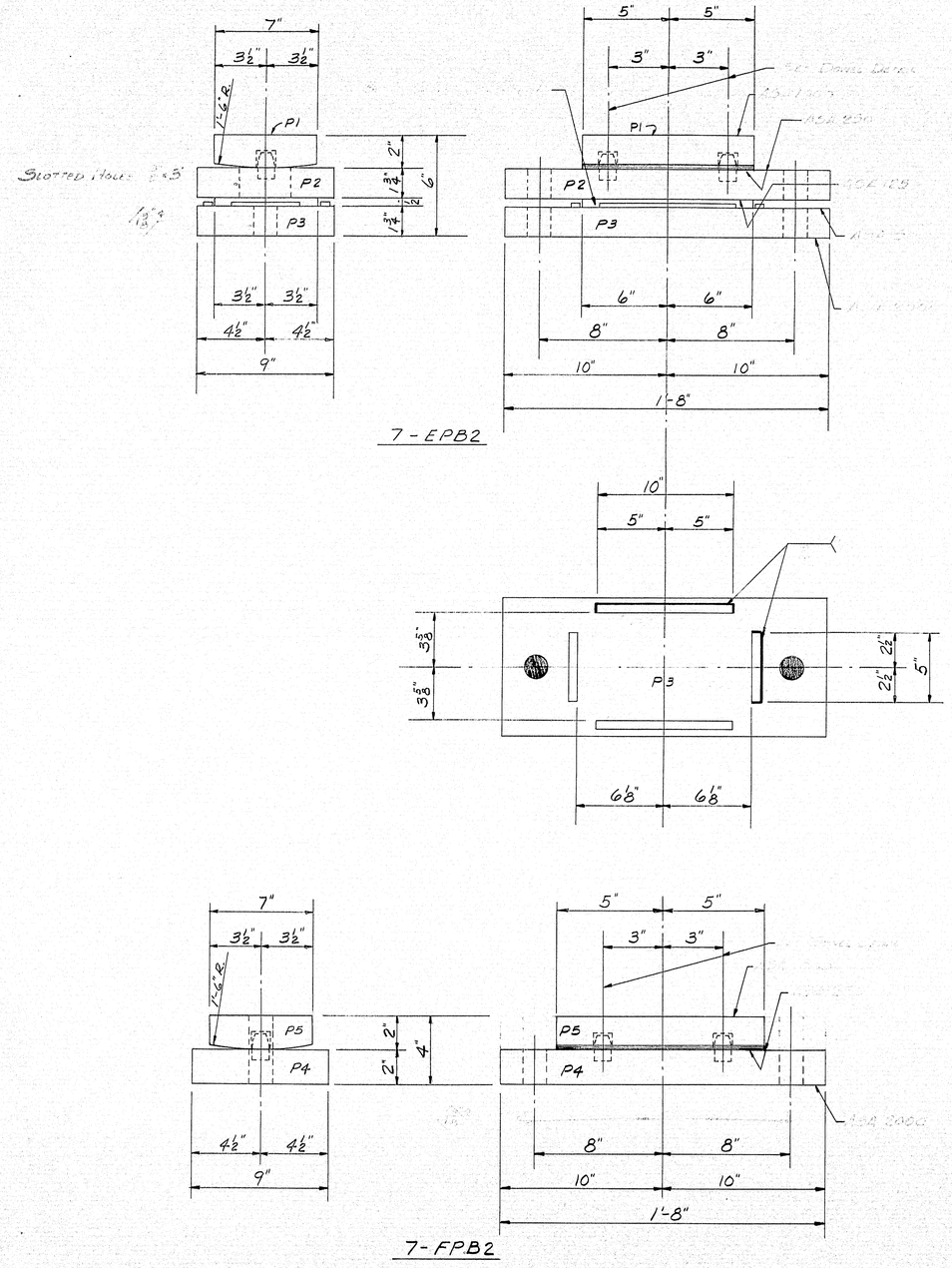

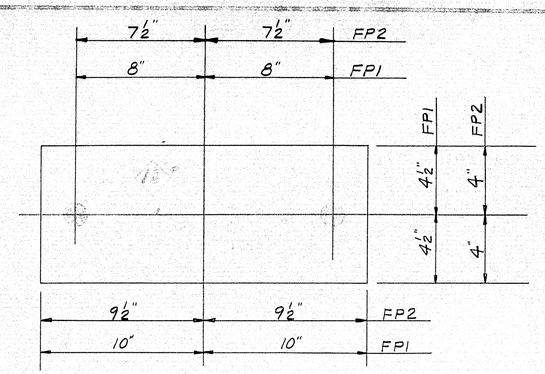

14 - FP1
14 - FP2

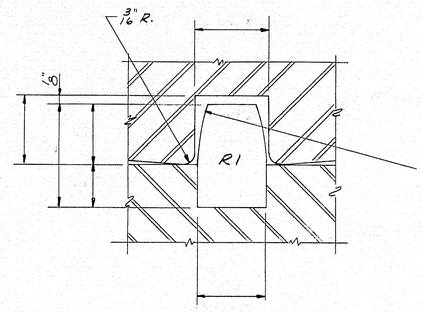

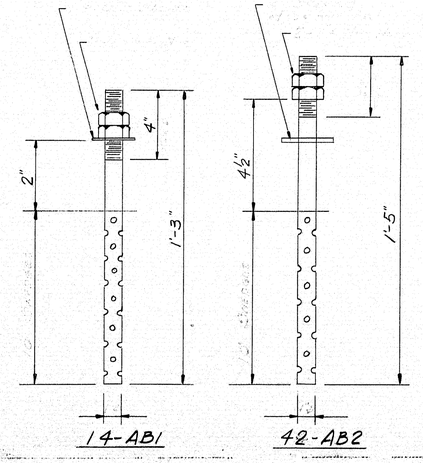

14-AB1 42-AB2

PAINT NOTES

No Paint on anchor bolts-oil threads. No paint on top surface and ½" down from top on sides of sole plates. Coat with boiled linseed oil. [redacted]
No paint on surfaces finished ASA 125.
On surfaces finished ASA 250 paint one shop coat.

SHIP MARK	NO.	MARK	SHAPE	LENGTH		WT.	REMARKS
EPB2	7		PEDESTAL				
	7	P1	PL - 7 x 2⅛	0	10		FINISHED A36
	7	P2	PL - 9 x 1¾	1	8		Do Do
	7	P3	Do	1	8		Do Do
	7		PL - 7 x ½	1	0		SELF LUBRICATING BRONZE & LUBRITE. REQ. R
	14	fb1	BAR ½ x ¼	0	10		A36
	14	fb2	Do	0	5		A36
FPB2	7		PEDESTAL				
	7	P4	PL 9 x 2	1	8		FINISHED A36
	7	P5	PL 7 x 2⅛	1	10		Do A36
	28						DOWEL - MACHINED A36
FP1	14		9 x ⅛	1	8		[illegible]
FP2	14		8 x ⅛	1	7		Do
AB1	14			1	3		SWEDGE A36
AB2	42			1	5		Do A36
	56						
	14						
	14	PW1					[illegible]

SHIPPED

SHOP CONNECTIONS: WELD W/CH-E7018, [illegible] SHOP & PRIMER PL TO 50° F.
FIELD CONNECTIONS: BOLT & WELD
NOTES: [illegible] U.N.
PAINT: [illegible] SHOP & SEE PAINT NOTE TOP SHEET

PROJ. No. I-95-8(61) 222

BEARING PEDESTALS

2	S.H.C.	8-18-65	
3	CUST.	8-18-65	
4	PORT. REQ.	8-18-65	
2	F.A.	8-3-65	
DRAWN	7-27-65	C.J.M.	
REVISION			
REVISION			
REVISION			

APR. 8-16-65

Bancroft & Martin Inc.
Bowen, Maine

I-95 OVER CANADIAN PACIFIC RAILWAY
T2, R8 PENOBSCOT COUNTY, MAINE

CUSTOMER CIANCHETTE BROS. INC.
DESIGNER M.S.H.C., BRIDGE DIVISION
ORDER VERBAL DWG. B65-130-S1

97-196Z

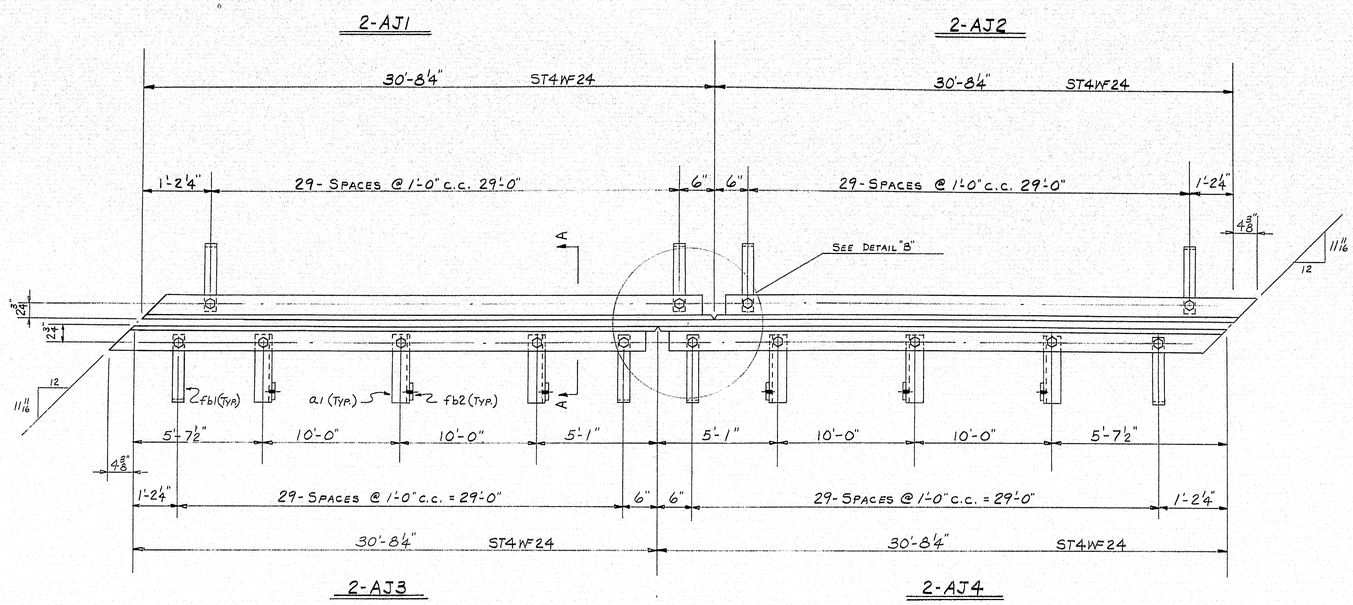

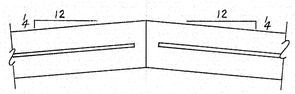

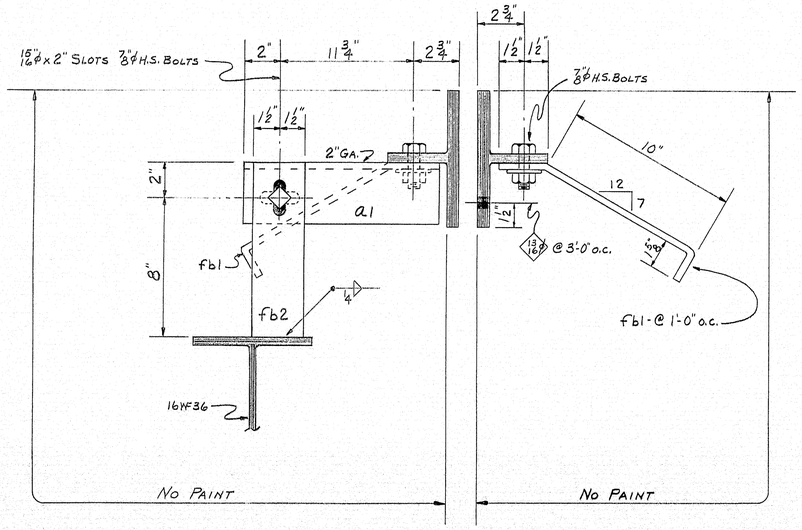

SEC. A-A

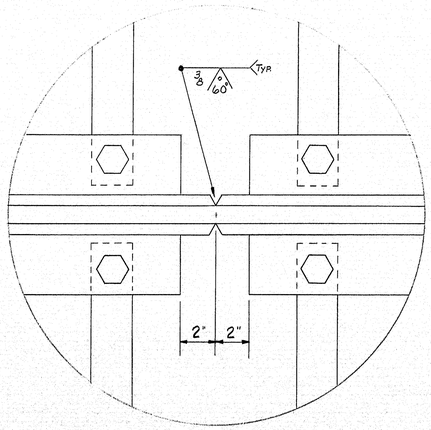

DETAIL "B"

SHIP MARK	NO.	MARK	SHAPE	LENGTH	WT.	REMARKS
AJ1	2		ST4WF24	30 8¼		A36
AJ2	2			31 0⅝		
AJ3	2			31 0⅝		
AJ4	2		do	30 8¼		do
	12	a1	3½x3½x3/8 L	1 ¾		4-R 6-L
	240	fb1	FB. 2½x3/8	1 3		BENT
	12	fb2	FB. 3x3/8	0 10		
	264	SHOP	7/8φ H.S. BOLT	0 2¼		HEAVY NUTS A325
	264	SHOP	7/8φ H.S. WASHERS			

BILL OF MATERIAL — DWG. B65-130-S2

SHOP CONNECTIONS: 7/8φ H.S. BOLTS
FIELD CONNECTIONS: WELD
HOLES: 15/16φ U.N.
PAINT: STATE OF MAINE SPEC'S.

PROJ. No. I-95-8(61) 222

ARMORED JOINT

PRINT ISSUE		
2	S.H.C.	8-18-65
3	CUST.	8-18-65
5	SHOP	8-18-65
2	F.A.	8-3-65
DRAWN	7-28-65	C.J.M.
REVISION		
REVISION		
REVISION		

APR 8-16-65

Bancroft & Martin Inc.
Brewer, Maine

I-95 OVER CANADIAN PACIFIC RAILWAY
T2 RB PENOBSCOT COUNTY, MAINE

CUSTOMER CIANCHETTE BROS. INC.
DESIGNER STATE HIGHWAY COMMISSION

ORDER VERBAL — DWG. B65-130-S2

97-197

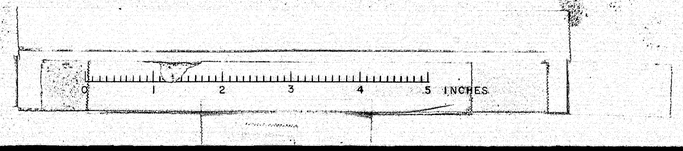

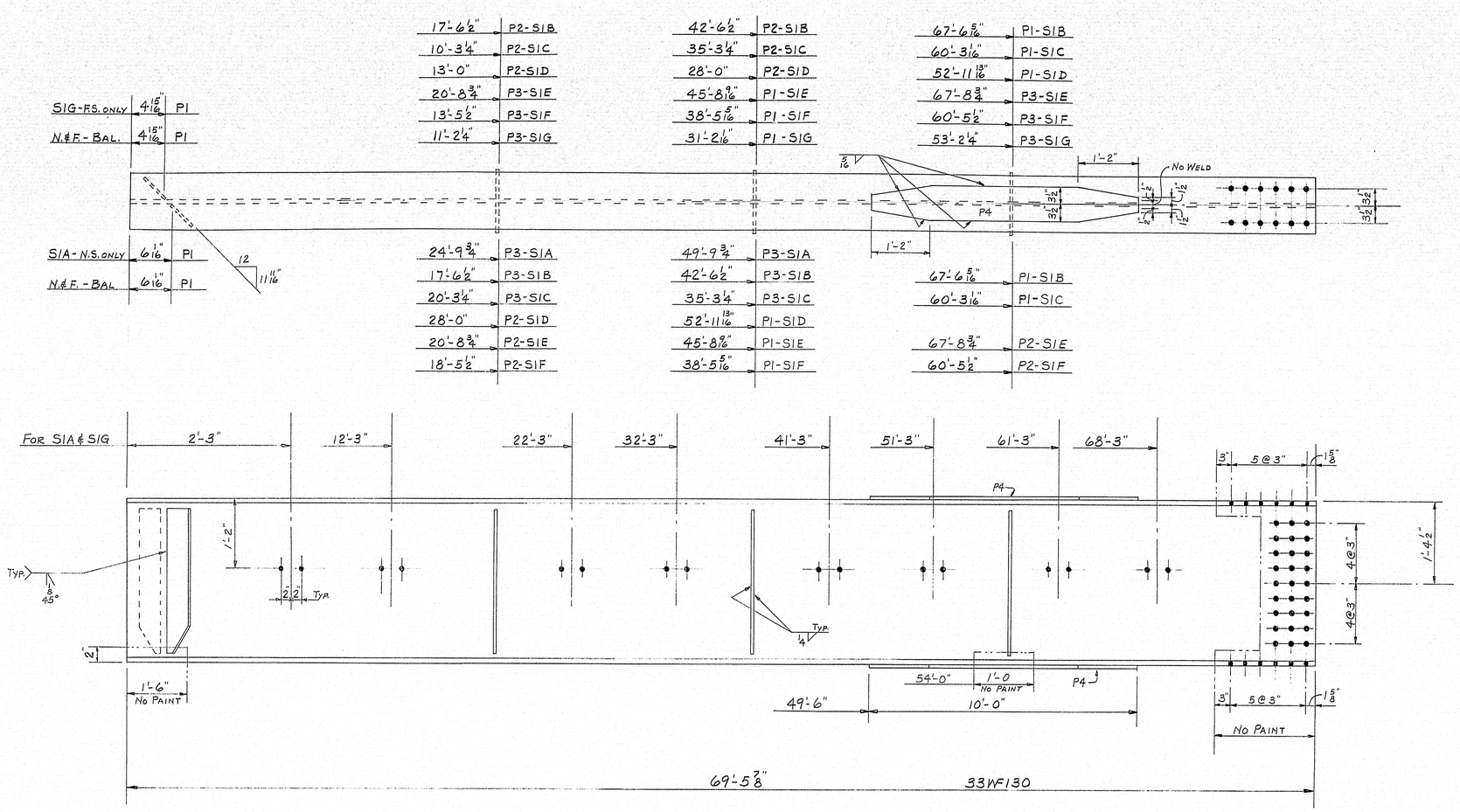

ONE EACH

S1A-S1B-S1C-S1D-S1E-S1F-S1G

PLACE ANY NATURAL CAMBER UP.

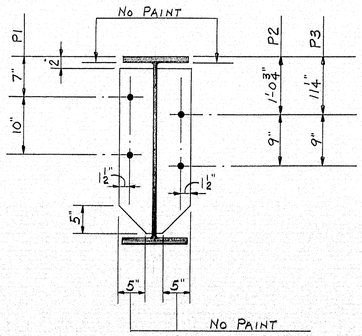

SHIP MARK	NO.	MARK	SHAPE	LENGTH	WT.	REMARKS
S1A	1		33WF130	69 5⅞		A36
S1B	1			69 5⅞		
S1C	1			69 5⅞		
S1D	1			69 5⅞		
S1E	1			69 5⅞		
S1F	1			69 5⅞		
S1G	1		do	69 5⅞		do
	23	P1	PL 6x⅜	2 5		A36
	11	P2	do	2 5		
	12	P3	do	2 5		
	14	P4	PL 7x⅜	10 0		do

BILL OF MATERIAL — DWG. B65-130-S3

CERTIFICATE OF COMPLIANCE REQUIRED FOR ELECTRODES AND FLUX.

SHOP CONNECTIONS: WELD (E-70 LOW HYDROGEN)
FIELD CONNECTIONS: BOLT ⅞"ϕ H.S. # ¾"ϕ M. BOLTS
HOLES: 15/16"ϕ U.N.
PAINT: STATE OF MAINE SPEC'S.

PROJ. No. I-95-8(61) 222

STRINGERS SPAN #1

PRINT ISSUE		
2	S.H.C.	8-18-65
3	CUST.	8-18-65
5	SHOP	8-18-65
2	F.A.	8-3-65
DRAWN	7-29-65	C.J.M.
REVISION		
REVISION		
REVISION		

APP. 8-16-65

Bancroft & Martin Inc.
Brewer, Maine

I-95 OVER CANADIAN PACIFIC RAILWAY
T2 R8 PENOBSCOT COUNTY, ME.

CUSTOMER CIANCHETTE BROS. INC.
DESIGNER STATE HIGHWAY COMMISSION
ORDER VERBAL DWG. B65-130-S3

97-198

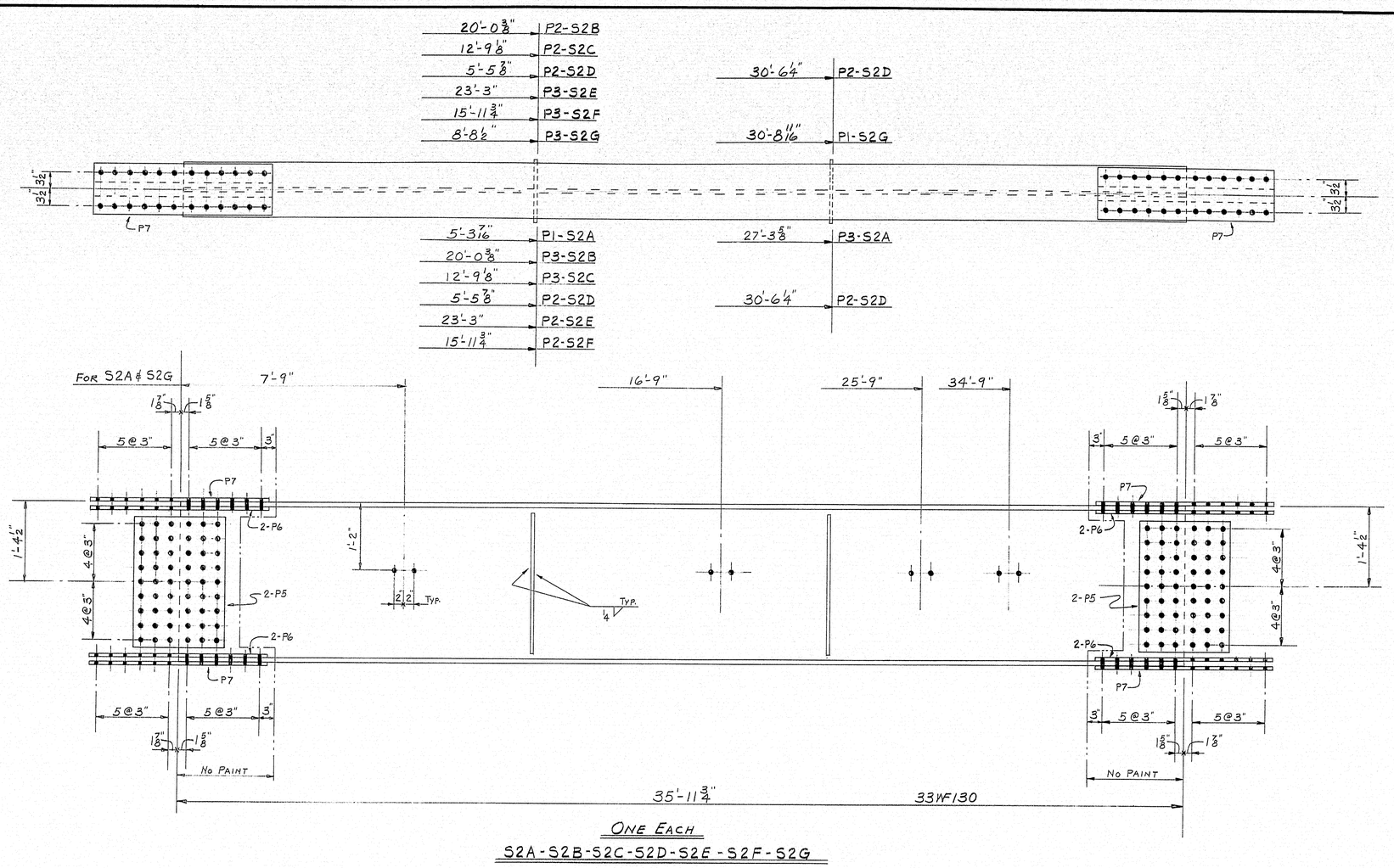

One Each

S2A-S2B-S2C-S2D-S2E-S2F-S2G

Match This End With Stringers Marked "S1"

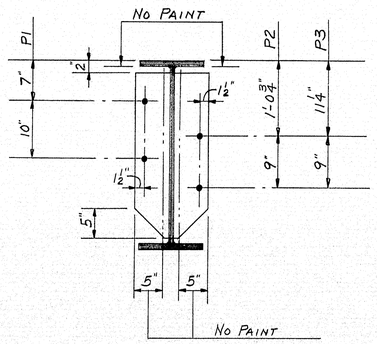

Match This End With Stringers Marked "S3"

Place any Natural Camber up.

SHIP MARK	NO.	MARK	SHAPE	LENGTH		WT.	REMARKS
S2A	1		33WF130	35	11 3/4		A36
S2B	1			35	11 3/4		
S2C	1			35	11 3/4		
S2D	1			35	11 3/4		
S2E	1			35	11 3/4		
S2F	1			35	11 3/4		
S2G	1		do	35	11 3/4		do
	2	P1	PL 6 x 3/8	2	5		A36
	8	P2	do	2	5		
	6	P3	do	2	5		
	28	P5	PL 18 1/2 x 1/2	2	3		
	56	P6	PL 4 x 3/4	3	0 1/2		
	28	P7	PL 11 x 7/16	3	0 1/2		do
FIELD	772		7/8" ϕ H.S. BOLT	0	3		A325
	688		do	0	3 1/2		do
	1460		7/8" ϕ H.S. WASHERS				

BILL OF MATERIAL — DWG. B65-130-S4

Certificate of Compliance Required For Electrodes and Flux.

SHOP CONNECTIONS: Weld (E-70 Low Hydrogen)
FIELD CONNECTIONS: Bolt 7/8" ϕ H.S. & 3/4" ϕ M. Bolts
HOLES: 15/16" ϕ U.N.
PAINT: State of Maine Spec's.

Proj. No. I-95-8(61) 222

Stringers Span #2

PRINT ISSUE		
2	S.H.C.	8-18-65
3	Cust.	8-18-65
5	Shop	8-18-65
2	F.A.	8-2-65
DRAWN	7-30-65	C.J.M.
REVISION		
REVISION		
REVISION		

App. 8-16-65

Bancroft & Martin Inc.
Brewer, Maine

I-95 over Canadian Pacific Railway
T2 R8 Penobscot County, Maine

CUSTOMER Cianchette Bros. Inc.
DESIGNER State Highway Commission
ORDER Verbal DWG. B65-130-S4

97-199

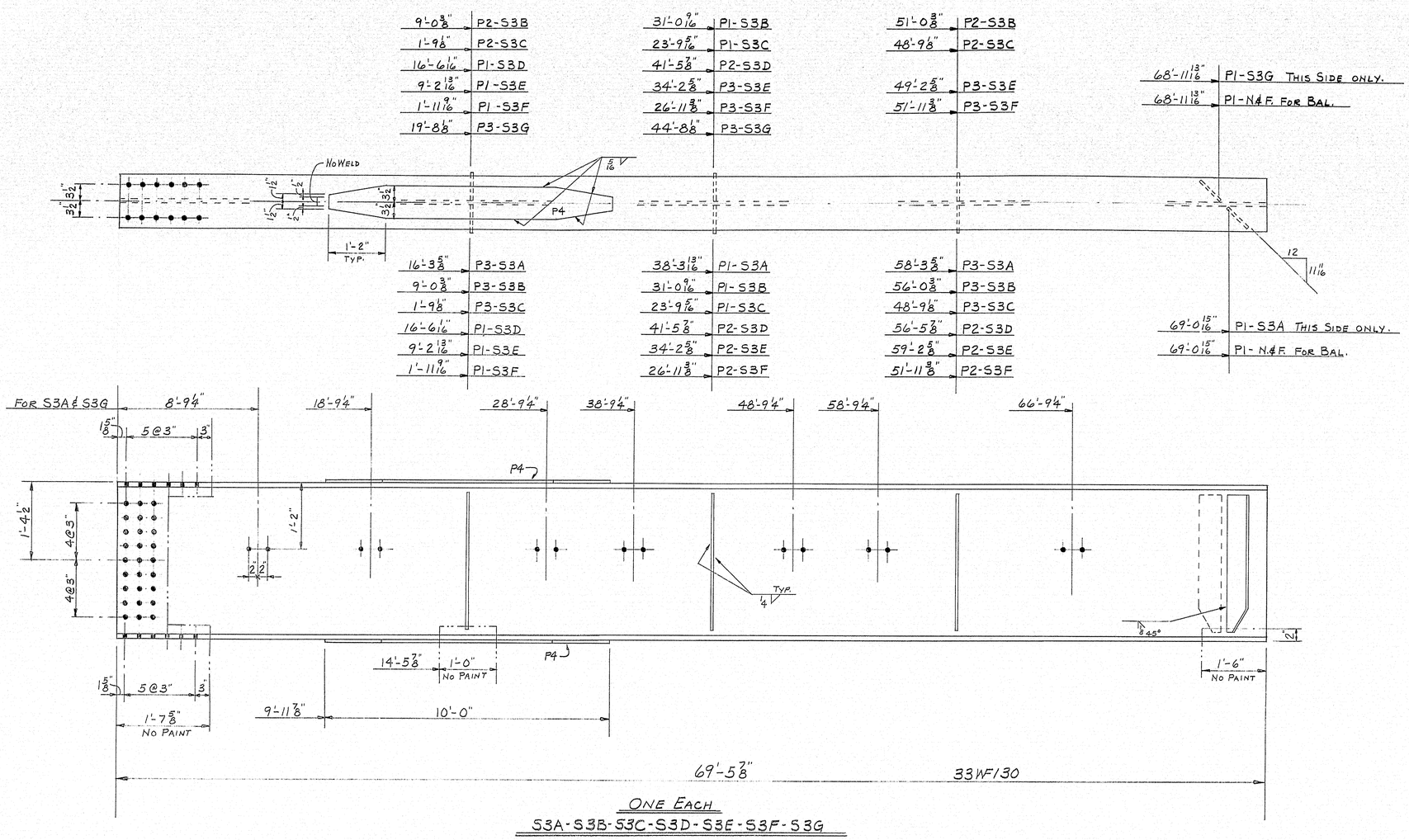

ONE EACH
S3A-S3B-S3C-S3D-S3E-S3F-S3G

MATCH THIS END WITH STRINGERS MARKED - "S2"

PLACE ANY NATURAL CAMBER UP.

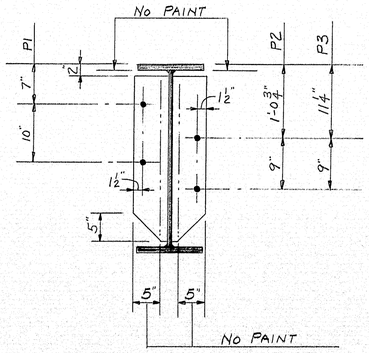

SHIP MARK	NO.	MARK	SHAPE	LENGTH	WT.	REMARKS
S3A	1		33WF130	69 5 7/8		A36
S3B	1			69 5 7/8		
S3C	1			69 5 7/8		
S3D	1			69 5 7/8		
S3E	1			69 5 7/8		
S3F	1			69 5 7/8		
S3G	1		do	69 5 7/8		
	23	P1	PL 6x3/8	2 5		A36
	11	P2	do	2 5		do
	12	P3	do	2 5		do
	14	P4	PL 7x3/8	10 0		do

BILL OF MATERIAL — DWG. B65-130-S5

CERTIFICATE OF COMPLIANCE REQUIRED FOR ELECTRODES AND FLUX.

SHOP CONNECTIONS: WELD (E-70 LOW HYDROGEN)
FIELD CONNECTIONS: BOLT 7/8φ H.S. & 3/4φ M. BOLT
HOLES: 15/16φ U.N.
PAINT: STATE OF MAINE SPEC'S.

PROJ. No. I-95-8(61) 222

STRINGERS SPAN #3

PRINT ISSUE		
2	S.H.C.	8-18-65
3	CUST.	8-18-65
5	SHOP	8-18-65
2	F.A.	8-3-65
DRAWN	8-2-65	C.J.M.
REVISION		
REVISION		
REVISION		

APPR. 8-16-65

Bancroft & Martin Inc.
Brewer, Maine

I-95 OVER CANADIAN PACIFIC RAILWAY
T2 R8 PENOBSCOT COUNTY, MAINE

CUSTOMER CIANCHETTE BROS. INC.
DESIGNER STATE HIGHWAY COMMISSION
ORDER VERBAL
DWG. B65-130-S5

97-200

0 1 2 3 4 5 INCHES

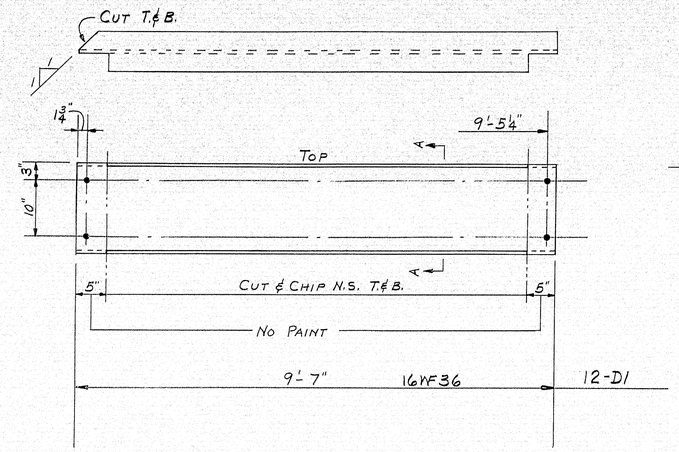

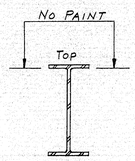

SEC. A-A

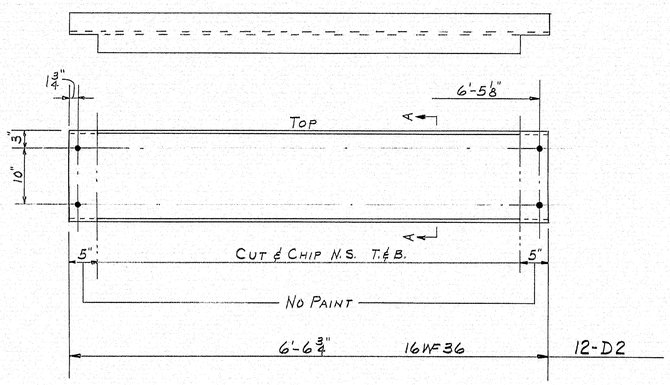

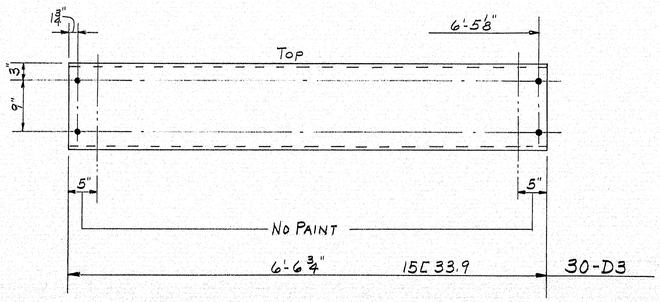

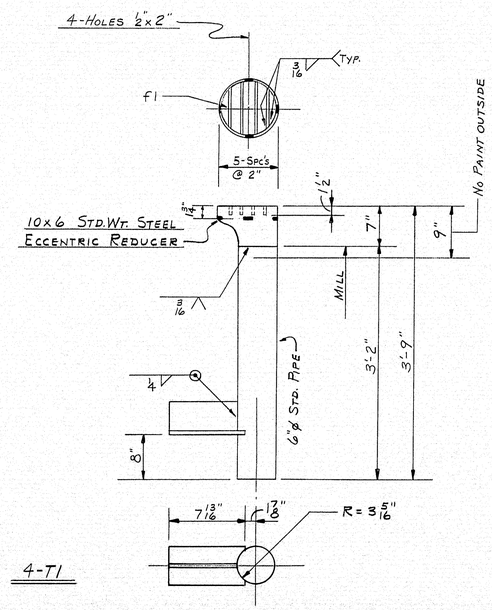

4-T1

4-DR1

SHIP MARK	NO.	MARK	SHAPE	LENGTH		WT.	REMARKS
			BILL OF MATERIAL				DWG. B65-130-S6
D1	12		16WF36	9	7		A36
D2	12		do	6	6 3/4		"
D3	30		15[33.9	6	6 3/4		do
DR1	4		6"ø STD. PIPE	3	2		MIE
	4		10x6-STD. STEEL WELDG ECCENTRIC REDUCER				REQ.
	16	F1	BAR 1/2"x1/2"	0	10		CUT TO FIT
T1	4		ST6WF13.5	0	7 13/16		
FIELD	226		3/4"ø M. BOLT	0	1 1/2		

SHOP CONNECTIONS: WELD (E-70 LOW-HYDROGEN)
FIELD CONNECTIONS: BOLT & WELD
HOLES: 15/16"ø UNLESS NOTED
PAINT: STATE OF MAINE SPEC'S.

PROJ. No. I-95-8(61)222

DIAPHRAGMS & DRAINS

PRINT ISSUE		
2	S.H.C.	8-18-65
3	CUST.	8-18-65
5	SHOP	8-18-65
2	F.A.	8-3-65
DRAWN	8-2-65	C.J.M.
REVISION		
REVISION		
REVISION		

APP. 8-16-65

Bancroft & Martin Inc.
Brewer, Maine

I-95- OVER CANADIAN PACIFIC RAILWAY
T2 R8 PENOBSCOT COUNTY, MAINE

CUSTOMER CIANCHETTE BROS. INC.
DESIGNER STATE HIGHWAY COMMISSION

ORDER VERBAL DWG. B65-130-S6

97-200A

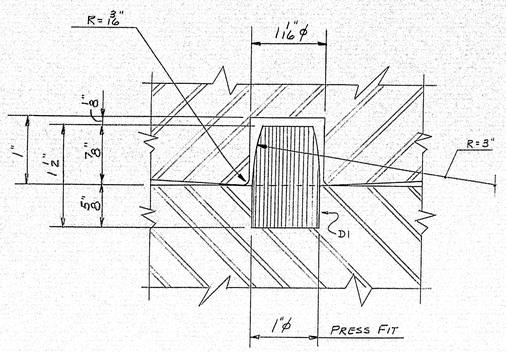

DOWEL DETAIL

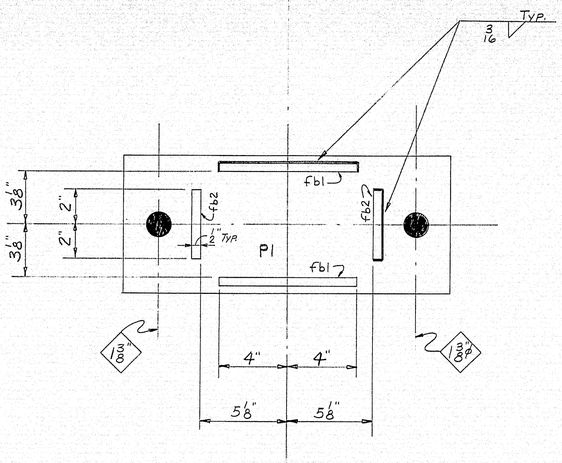

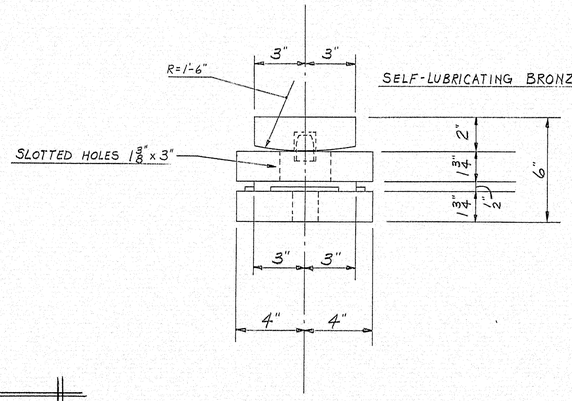

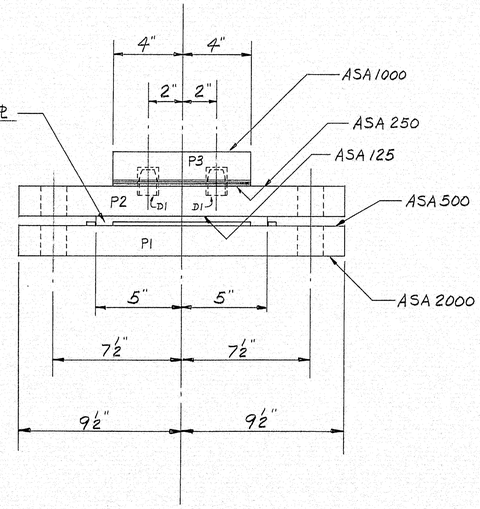

14-EPB1

NOTE: SEE PAINT NOTES ON SHEET B65-130-51.

SHIP MARK

BILL OF MATERIAL

DWG. B65-130-57

MARK	NO.	MARK	SHAPE	LENGTH		WT.	REMARKS
EPB-1	14		PEDESTAL				A36
	14	P1	PL 8 x 1 3/4	1	7		
	14	P2	do	1	7		
	14	P3	PL 6 x 2	0	8		FINISHED
	28	fb1	FB. 1/2 x 4	0	8		
	28	fb2	do	0	4		do
	28	D1	1"φ ROD	0	1 1/2		DOWEL
	14		PL 6 x 1/2	0	10		SELF-LUBRICATING BRONZE PLATE

SHOP CONNECTIONS: WELD (E-70 LOW HYDROGEN)
FIELD CONNECTIONS: BOLT & WELD
HOLES: 1 3/8"φ U.N.
PAINT: STATE OF MAINE SPEC'S.

PROJ. No. I-95-8(61) 222

BEARING PEDESTALS

PRINT ISSUE

3	CUST.	8-18-65
2	S.H.C.	8-18-65
2	REG. PRES.	8-18-65
2	F.A.	8-13-65
DRAWN	8-13-65	C.J.M.
REVISION		
REVISION		
REVISION		

APP. 8-16-65

Bancroft & Martin Inc.
Brewer, Maine

I-95 OVER CANADIAN PACIFIC RAILWAY
T2 R8 PENOBSCOT, COUNTY

CUSTOMER CIANCHETTE BROS. INC.
DESIGNER STATE HIGHWAY COMMISSION

ORDER VERBAL DWG. B65-130-57
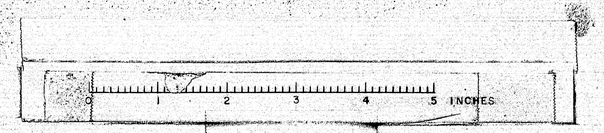
97-200B